4

Chapter Four

Structural Analysis and Design

4-1 Introduction.

4-2 Check of Minimum Thickness of Structural Member.

4-3 Design of Topping.

4-4 Design of One Way Rib Slab.

4-5 Design of Beam.

4-6 Design of Two Way Ribbed Slab.

4-7 Design of Column (28), (N-9 Axis) First Floor.

4-8 Design of Staircase.

4-9 Design of Shear Wall case.

4-10 Design of isolated Footing

4-1 | **Introduction**

Reinforced concrete (RC) is a versatile composite and one of the most widely used materials in modern construction. Concrete is a relatively brittle material that is strong under compression but less so in tension. Plain, unreinforced concrete is unsuitable for many structures as it is relatively poor at with standing stresses induced by vibrations, wind loading and so on.

To increase its overall strength, steel rods, wires, mesh or cables can be embedded in concrete before it sets. This reinforcement, often known as rebar, resists tensile forces. By forming a strong bond together, the two materials are able to resist a variety of applied forces, effectively acting as a single structural element.

Reinforced concrete can be precast or cast-in-place (in situ) concrete, and is used in a wide range of applications such as; slab, wall, beam, column, foundation, and frame construction.

4-1-1 Concrete and its Classifications:

Plain concrete is made by mixing cement, fine aggregate, coarse aggregate, water, and frequently admixtures**, Structural concrete can be classified into:**

- Lightweight concrete with a unit weight from about $1350 \text{ to } 1850 \left(\frac{kg}{m^3}\right)$ produced from aggregates of expanded shale, clay, slate, and slag.
- Normal-weight concrete with a unit weight from about $1800 \text{ to } 2400 \left(\frac{kg}{m^3}\right)$ produced from the most commonly used aggregates— sand, gravel, crushed stone.
- Heavyweight concrete with a unit weight from about $3200 \text{ to } 5600 \left(\frac{kg}{m^3}\right)$ produced from such materials such as barite, limonite, magnetite, ilmenite, hematite, iron, and steel punching or shot. It is used for shielding against radiations in nuclear reactor containers and other structures.

4-1-2 Compressive strength of concrete:

The strength of concrete is controlled by the proportioning of cement, coarse and fine aggregates, water, and various admixtures. The most important variable is (w/c) ratio.

Concrete strength (f_c') – uniaxial compressive strength measured by a compression test of a standard test cylinder ($150\ mm\ diameter\ by\ 300\ mm\ high$) on the 28th day–ASTM C31, C39. In many countries, the standard test unit is the cube ($200\ x\ 200\ x\ 200\ mm$).

The concrete strength depends on the size and shape of the test specimen and the manner of testing. For this reason the cylinder ($\emptyset\ 150mm\ by\ 300\ mm\ high$) strength is 80% of the $150\ mm$ cube strength and 83% of the $150\ mm$ cube strength, **figure (4-1)** demonstrate relation between cylinder and cube concrete test.

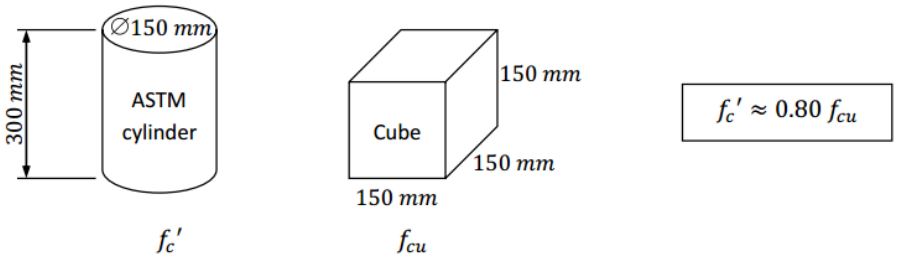

Figure (4-1) relation between cylinder and cube concrete test.

4-1-3 Modulus of Elasticity of concrete:

The modulus of elasticity of concrete varies, unlike that of steel, with strength. A typical stress-strain curve for concrete in compression is shown. The initial modulus (tangent at origin), the tangent modulus (at $0.5\ f_c'$), and the secant modulus are noted. Usually the secant modulus at from $25\ to\ 50\%$ of the compressive strength f_c' is considered to be the modulus of elasticity. For normal weight concrete, shall be permitted to be taken as $E_c = 4700\sqrt{f_c'}$ (Map), **figure (4-2)** demonstrate stress-strain curve of concrete.

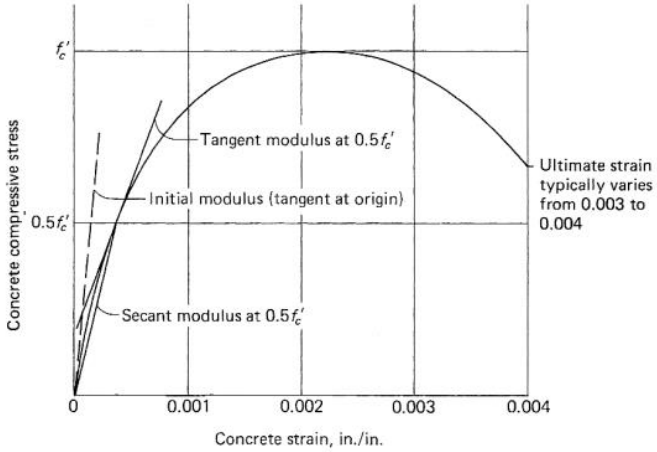

Figure (4-2) stress-strain curve of concrete.

4-1-4 Strength Design method (Ultimate strength method):

In the strength design method, the service loads are increased by factors to obtain the load at which failure is considered to be "imminently". This load is called the factored load or factored service load. The structure or structural element is then proportioned such that the strength is reached when the factored load is acting. The computation of this strength takes into account the nonlinear stress-strain behavior of concrete.

The strength design method may be expressed by the following:

Strength provided ≥ [strength required to carry factored loads]

Where the "strength provided" (such as moment strength) is computed in accordance with the provisions of a building code, and the "strength required" is that obtained by performing a structural analysis using factored loads.

4-1-5 Load Factors U and strength reduction Factor ∅ :

According to (ACI 318-11 9.2.1) the factor U for overload is given:

$$\boldsymbol{U = 1.4D}$$
$$\boldsymbol{U = 1.2D + 1.6L + 0.5\ (L_r\ or\ S\ or\ R)}$$
$$\boldsymbol{U = 1.2D + 1.6L + 0.5\ (L_r\ or\ S\ or\ R)}$$
$$\boldsymbol{U = 1.2D + 1.0W + 1.0\ L + 0.5(L_r\ or\ S\ or\ R)}$$
$$\boldsymbol{U = 1.2D + 1.0E + 1.0\ L + 0.2\ S}$$
$$\boldsymbol{U = 0.9D + 1.0W}$$
$$\boldsymbol{U = 0.9D + 1.0E}$$

Where:

$\boldsymbol{D}$: ***dead load*** .
$\boldsymbol{L}$: ***live load***.
$\boldsymbol{L_r}$: ***roof live load***.
$\boldsymbol{S}$: ***snow load***.
$\boldsymbol{R}$: ***rain load***.
$\boldsymbol{W}$: ***Wind load***.
$\boldsymbol{E}$: *Earthquake load*.

The factor ∅ (under strength factor) **according to ACI demonstrated in figure (4-3).**

Strength Condition	ϕ Factors
1. Flexure (with or without axial force)	
Tension-controlled sections	0.90
Compression-controlled sections	
Spirally reinforced	0.75
Others	0.65
2. Shear and torsion	0.75
3. Bearing on concrete	0.65
4. Post-tensioned anchorage zones	0.85
5. Struts, ties, nodal zones, and bearing areas in strut-and-tie models	0.75

Figure (4-3) values of understrength factors related to strength condition.

4-1-6 General considerations:

1- **ACI 318-11 Building code will be used in this project.**

2- **UBC-97 code will be used for lateral loads.**

3- **Ultimate strength design method will be used during the analysis and design of this project.**

4- **The compressive strength of concrete for all structural elements is B300 which equals to** $f_c' = 24\ Mpa$.

5- **Yield strength of reinforcing rebar's** $f_y = 420\ Mpa$.

4-2 | Check of Minimum Thickness of Structural Member:

It will be determined according to (ACI 318-11) to achieve deflection requirements, Figure (4-4) provided minimum thickness from code.

TABLE 9.5(a) — MINIMUM THICKNESS OF NONPRESTRESSED BEAMS OR ONE-WAY SLABS UNLESS DEFLECTIONS ARE CALCULATED

	Minimum thickness, *h*			
	Simply supported	One end continuous	Both ends continuous	Cantilever
Member	Members not supporting or attached to partitions or other construction likely to be damaged by large deflections			
Solid one-way slabs	$\ell/20$	$\ell/24$	$\ell/28$	$\ell/10$
Beams or ribbed one-way slabs	$\ell/16$	$\ell/18.5$	$\ell/21$	$\ell/8$

Notes:
Values given shall be used directly for members with normalweight concrete and Grade 420 reinforcement. For other conditions, the values shall be modified as follows:
a) For lightweight concrete having equilibrium density, w_c, in the range of 1440 to 1840 kg/m^3, the values shall be multiplied by $(1.65 - 0.0003w_c)$ but not less than 1.09.
b) For f_y other than 420 MPa, the values shall be multiplied by $(0.4 + f_y/700)$.

By locating ribs on slab drawing plan and manual calculations, table (4-1) summarize determination of thickness for ribs that makes maximum values:

Supporting type	min. thickness equation	Rib	No. of span	min. thickness
Simply supported	$\frac{L}{16}$	R_{14}	1	$\frac{4.8}{16} = 30\ cm$
One end continues	$\frac{L}{18.5}$	R_3	6	$\frac{5.25}{18.5} = 28.38\ cm$
Both end continuous	$\frac{L}{21}$	R_{13}	3	$\frac{3.89}{21} = 18.52\ cm$
Cantilever	$\frac{L}{8}$	R_{23}	2	$\frac{1.8}{8} = 22.5\ cm$

Table (4-1) determination of thickness for ribs from maximum values of cases.

The thickness of two way ribbed slab provided from (ACI 318-11) to achieve requirements of deflection, depends on the Flexural stiff ness of slab, by manual calculation comes about $\boldsymbol{h_{min} = 23.4\ cm}$.

So, select **Slab thickness** $\boldsymbol{h = 32\ cm\ (24\ cm\ Hollow\ Block + 8\ cm\ \ Topping)}$.

4-3 | Design of Topping:

4-3-1 Load calculations:

Topping in One way ribbed slab can be considered as a strip of **1 meter width** and span of hollow block length with both end fixed in the ribs**, Table (4-2)** shows Load calculations on topping.

Dead Load Form	Thickness $\boldsymbol{\delta}$ $(\boldsymbol{m})$	Unit weight $\boldsymbol{\gamma}$ $(\frac{\boldsymbol{kN}}{\boldsymbol{m^3}})$	$\boldsymbol{\gamma \times \delta \times 1}$ $(\frac{\boldsymbol{kN}}{\boldsymbol{m}})$
Tiles	0.03	23	$\boldsymbol{0.03 \times 23 = 0.69}$
Mortar	0.03	22	$\boldsymbol{0.03 \times 22 = 0.66}$
Coarse Sand	0.07	17	$\boldsymbol{0.07 \times 17 = 1.19}$
Topping	0.08	25	$\boldsymbol{0.08 \times 25 = 2}$
Interior Partitions			$\boldsymbol{1 \times 1 = 1}$
$\sum$ **Dead loads**			$\boldsymbol{5.54}$ $(\frac{\boldsymbol{kN}}{\boldsymbol{m}})$

Table (4-2) Dead Load calculations on topping.

Live load calculations$= 3 \times 1 = 3 \ (\frac{kN}{m})$

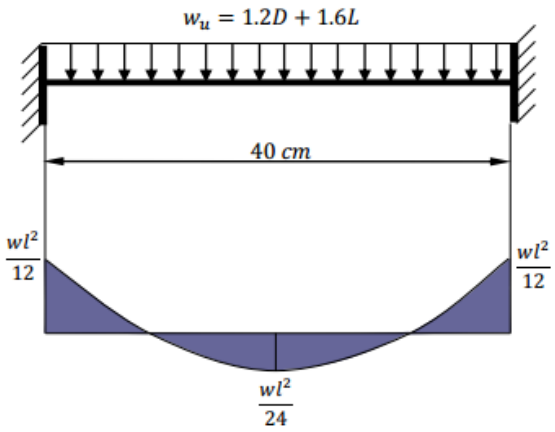

4-3-2 Factored Load:

Total Factored Load:

$$w_u = 1.2\,(5.54) + 1.6(3) = 11.45 \ (\frac{kN}{m})$$

Figure (4-5) Topping statically system.

$$M_u = \frac{w_u L^2}{12} = \frac{11.45 \times 0.4^2}{12} = 0.152 \ kN.m \,..\, for\ (1m) of\ strip\ width$$

Strength condition for plain concrete**:**

$\emptyset M_n \geq M_u$ (**ACI 22.5.1**) **.... where** $\emptyset = 0.55$

$M_n = 0.42\,\lambda\sqrt{f_c{}'\,S_m}$ **Where**S_m for rectangular section of the slab : $S_m = \frac{bh^2}{6} = \frac{1000 \times 80^2}{6}$

$$M_n = 0.42 \times \sqrt{24} \times \frac{1000 \times 80^2}{6} = 2.19\ kN.m$$

$$0.55 \times 2.19 = 1.2\ kN.m \gg M_u = 0.152\ kN.m$$

NO Reinforcement is required by analysis, According to (**ACI 10.5.4**) ., provide $A_{s.min}$ for slabs as shrinkage and temperature reinforcement.

$\rho_{\text{shrinkage}} = 0.0018$ According to (ACI 7.12.2.1)

$$A_s = \rho bt = 0.0018 \times 1000 \times 80 = 144\ mm^2 \quad for\ 1m\ strip$$

Step (s) is the smallest of:

1. 3h = 3×80 =240 mm **control**
2. 450mm.
3. S =380$\left(\frac{280}{f_s}\right) - 2.5C_c = 380\left(\frac{280}{\frac{2}{3}420}\right) - 2.5\,.20 = 330$mm

Take$\emptyset$ **8 @ 200 mm in both direction,** $S = 200\ mm < S_{max} = 240\ mm \,..\, OK$

4-4 | Design of One Way Rib Slab

4-4-1 Determination of geometry:

Requirements for Ribbed Slab (T-Beam Consideration According to ACI- 318-11).

$\mathbf{b_w \geq 10\ cm}$ …. $\boldsymbol{select}$ $\mathbf{b_w = 12\ cm}$

$\mathbf{h \leq 3.5 b_w = 3.5 \times 12 = 42 cm}$ .. $\boldsymbol{select}$ $\boldsymbol{h = 32\ cm}$

$\mathbf{t_f \geq \frac{L_n}{12} \geq 50\ mm}$ …. $\boldsymbol{select}$ $\mathbf{t_f = 8 cm}$

Figure (4-6) shows typical section of rib with overall slab thickness $h = 32cm$.

➢ Load Calculations for Rib 1:

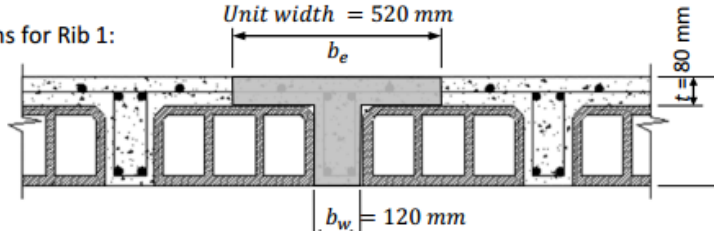

4-4-2 Load calculations for Rib:

$f_c' = 24\ Mpa$, $f_y = 420\ Mpa$, $L_l = 2\ (\frac{kN}{m^2})$

Dead Load Form	Thickness $\boldsymbol{\delta}$ $(\boldsymbol{m})$	Unit weight $\boldsymbol{\gamma}$ $(\frac{kN}{m^3})$	$\boldsymbol{\gamma \times \delta \times 1}$ $(\frac{\boldsymbol{kN}}{\boldsymbol{m}})$
Tiles	0.03	23	$\mathbf{0.03 \times 23 \times 0.52 = 0.359}$
Mortar	0.03	22	$\mathbf{0.03 \times 22 \times 0.52 = 0.343}$
Coarse Sand	0.07	17	$\mathbf{0.07 \times 17 \times 0.52 = 0.619}$
Topping	0.08	25	$\mathbf{0.08 \times 25 \times 0.52 = 1.04}$
RC Rib	0.24	25	$\mathbf{0.24 \times 25 \times 0.12 = 0.72}$
Hollow Block	0.24	10	$\mathbf{0.24 \times 10 \times 0.40 = 0.96}$
Plaster	0.03	22	$\mathbf{0.03 \times 22 \times 0.52 = 0.343}$
Interior Partitions			$\mathbf{1 \times 0,52 = 0.52}$
$\sum$ $\boldsymbol{Dead\ loads}$ **/rib**			$\mathbf{4.91}$ $(\frac{\boldsymbol{kN}}{\boldsymbol{m}})$

Table (4-3) Dead Load calculations of rib.

Live load calculations $= 2 \times 0.52 = 1.04$ $(\frac{kN}{m})$ **/ rib**

Figure (4-7) shows the location of rib in slab drawing plan**.**

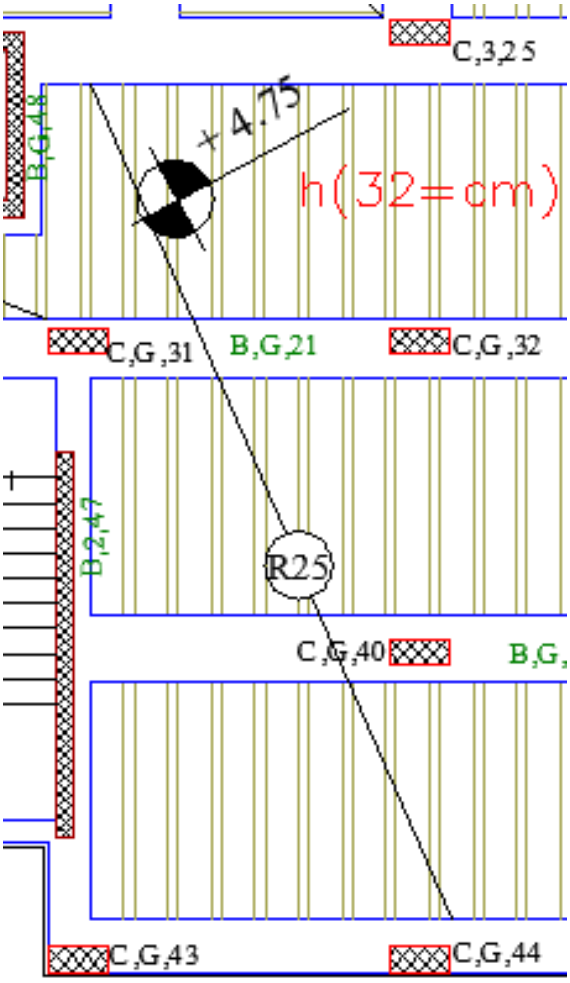

Figure (4-7) location of Rib (R25) in slab drawing plan.

Check for chosen effective flange width (b_e) According to (ACI 318-11)
b_e is the smallest of :

(1) $b_e \leq \frac{L}{4} = \frac{254}{4} = 635\ mm$ ….*where* (L)*is the smallest clear span of the rib.*

(2) $b_e \leq b_w + 16h_f = 120 + 16(80) = 1400\ mm.$

(3) $b_e \leq$ *center to center between adjacent beams* $= 400 + 120 =$ **$520\ mm$** **..*OK***

4-4-3 Structural analysis of Rib (R25):

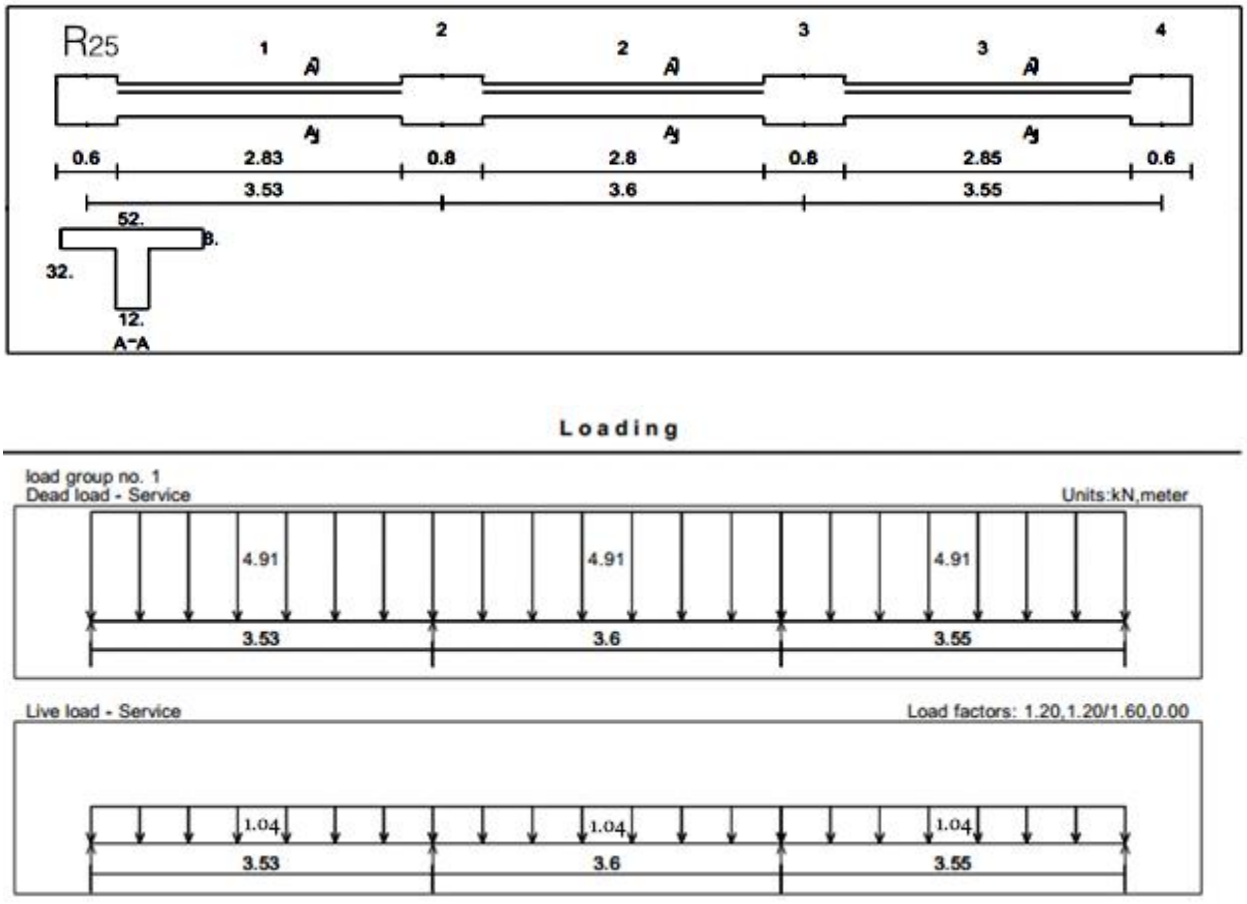

Figure (4-8) shows rib geometry and loads.

The envelope shear and moment diagrams (for all load combinations). Using the structural analysis and design program (Atir 12) we obtain the Envelope Moment diagram for Rib21.

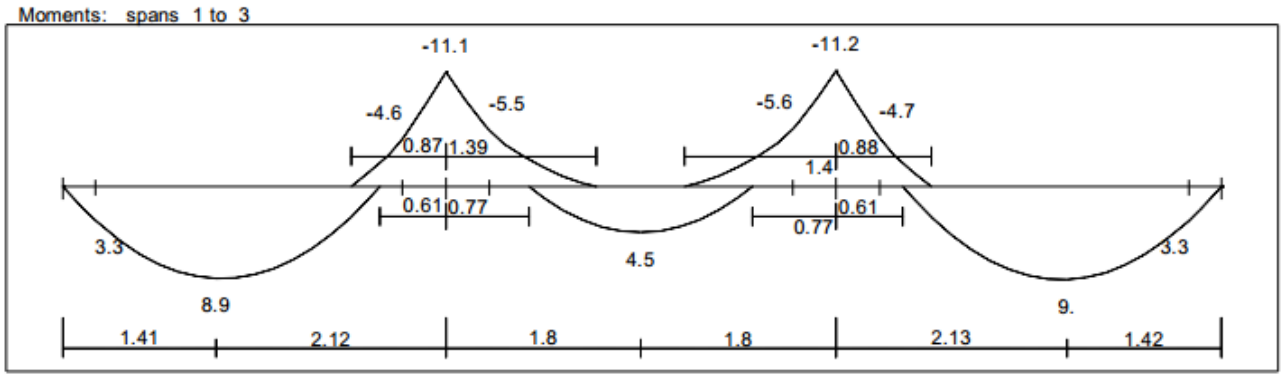

Figure (4-9) Moment envelop diagram.

4-4-4 Design Rib for Flexure (R25):

Design of (Rib25) for positive moments

Assume bar diameter ∅ 12 for main positive reinforcement.

$$d = h - cover - d_{stirrups} - \frac{d_b}{2} = 320 - 20 - 10 - \frac{12}{2} = 284\ mm$$

The maximum positive moment in all spans of Rib21 $M_u = +9\ kN.m$

Check if $(a > h_f)$:

$$M_{nf} = 0.85\, f_c{}' b h_f \left(d - \frac{h_f}{2}\right) = 0.85(24).(520).(80).\left(284 - \frac{80}{2}\right) = 207.06\ kN.m$$

$$M_{nf} = 207.06\ kN.m \gg \frac{M_u}{\emptyset} = \frac{9}{0.9} = 10\ kN.m \ \ldots\ldots a < h_f$$

The section will be designed as rectangular section with $b = 520\ mm$.

$$R_n = \frac{M_u}{\emptyset bd} = \frac{9 \times 10^6}{0.9 \cdot 520 \cdot 284^2} = 0.238\ MPa\ , \quad m = \frac{f_y}{0.85\, f_c{}'} = \frac{420}{0.85 \cdot 24} = 20.58$$

$$\rho = \frac{1}{m}\left(1 - \sqrt{1 - \frac{2R_n m}{f_y}}\right) = \frac{1}{20.58}\left(1 - \sqrt{1 - \frac{2 \cdot 0.238 \cdot 20.58}{420}}\right) = 0.00057$$

$$A_s = \rho bd = 0.00057 \cdot 520 \cdot 284 = 84.17\ mm^2$$

Check for $A_{s,min}$ **:**

$$A_{s,min} = 0.25\ \frac{\sqrt{f_c{}'}}{f_y} \cdot b_w d\ \geq\ \frac{1.4}{f_y}\ b_w d$$

$$A_{s,min} = 0.25\ \frac{\sqrt{24}}{420} \cdot 120 \cdot 284 = 99.37\ mm^2$$

$$A_{s,min} = \frac{1.4}{420} \cdot 120 \cdot 284 = 113.6\ mm^2\ - control$$

$$A_s = 84.17\ mm^2 < A_{s,min} = 113.6\ mm^2 \ \ldots\ldots select\ A_s = A_{s,min} = 113.6\ mm^2$$

Use 2∅10 *with* $A_s = 1.58\ cm^2 > A_{s,req} = 1.136\ cm^2$

Check for strain:

$$a = \frac{A_s f_y}{0.85\, f_c' b} = \frac{158 \cdot 420}{0.85 \cdot 24 \cdot 520} = 6.25\ mm$$

$$c = \frac{a}{\beta_1} \quad , \quad \beta_1 = 0.85$$

$$c = \frac{6.25}{0.85} = 7.35\ mm$$

$$\varepsilon_s = 0.003\left(\frac{d-c}{c}\right) = 0.003\left(\frac{284-7.35}{7.35}\right) = 0.1129 > 0.005 \quad -OK$$

Note that:

Moments equals or less than $M_u = +9\ kN.m$, use 2∅10 for each rib span. So that other positive moments $M_u = +8.9\ , +4.5\ kN.m < M_u = +9\ kN.m$ have reinforcement of 2∅10 for each rib span.

Design of (Rib25) for negative moments:

The maximum positive moment in all spans $M_u = -5.6\ kN.m$

Assume bar diameter ∅ 12 for main positive reinforcement.

$$d = h - cover - d_{stirrups} - \frac{d_b}{2} = 320 - 20 - 10 - \frac{12}{2} = 284\ mm$$

$$R_n = \frac{M_u}{\emptyset bd} = \frac{5.6 \times 10^6}{0.9 \cdot 520 \cdot 284^2} = 0.148\ MPa$$

$$m = \frac{f_y}{0.85\, f_c'} = \frac{420}{0.85 \cdot 24} = 20.58$$

$$\rho = \frac{1}{m}\left(1 - \sqrt{1 - \frac{2R_n m}{f_y}}\right) = \frac{1}{20.58}\left(1 - \sqrt{1 - \frac{2 \cdot 0.148 \cdot 20.58}{420}}\right) = 0.00035$$

$A_s = \rho bd = 0.00035 \cdot 520 \cdot 284 = 51.69\ mm^2$

Check for $A_{s,min}$:

$A_{s,req} = 51.69\ mm^2 < A_{s,min} = 113.6\ mm^2$ …. $select\ A_s = A_{s,min} = 113.6\ mm^2$

Use 2∅10 $with\ A_s = 1.58\ cm^2 > A_{s,req} = 1.136\ cm^2$

Check for strain:

$$a = \frac{A_s f_y}{0.85 f_c' b} = \frac{158 \cdot 420}{0.85 \cdot 24 \cdot 120} = 27.1\ mm$$

$$c = \frac{a}{\beta_1} \quad , \quad \beta_1 = 0.85$$

$$c = \frac{27.1}{0.85} = 31.88\ mm$$

$$\varepsilon_s = 0.003\left(\frac{d-c}{c}\right) = 0.003\left(\frac{284-31.88}{31.88}\right) = 0.0237 > 0.005 \quad -OK$$

Note that:

Moments equals or less than $M_u = -5.6\ kN.m$, use 2∅10 for each rib span. So that other negative moments:
$M_u = -5.5$, -4.7 , $-4.6\ kN.m < M_u = -5.6\ kN.m$ Have reinforcement of 2∅10 for each rib span.

4-4-5 Design Rib for Shear:

4-4-5-1 Design procedure for shear:

Design of cross section subjected to shear and Flexure:

$$\emptyset V_n \geq V_u$$

Where:

V_u : $factored\ shear\ force\ at\ the\ section$.
V_n : $the\ nominal\ shear\ strength$;

$$V_n = V_c + V_s$$

V_c : $the\ nominal\ shear\ strenght\ provided\ by\ concrete$.

$$V_c = \frac{1}{6}\lambda\sqrt{f_c'}\ b_w d \qquad ,\lambda = 1.0\ \ for\ normal\ weight\ concrete.$$

V_s : $the\ nominal\ shear\ strenght\ provided\ by\ shear\ reinforcement\ (stirrups)$.

$$V_s = \frac{A_v \cdot f_y \cdot d}{s}$$

- **Shear conditions and cases (Items):**

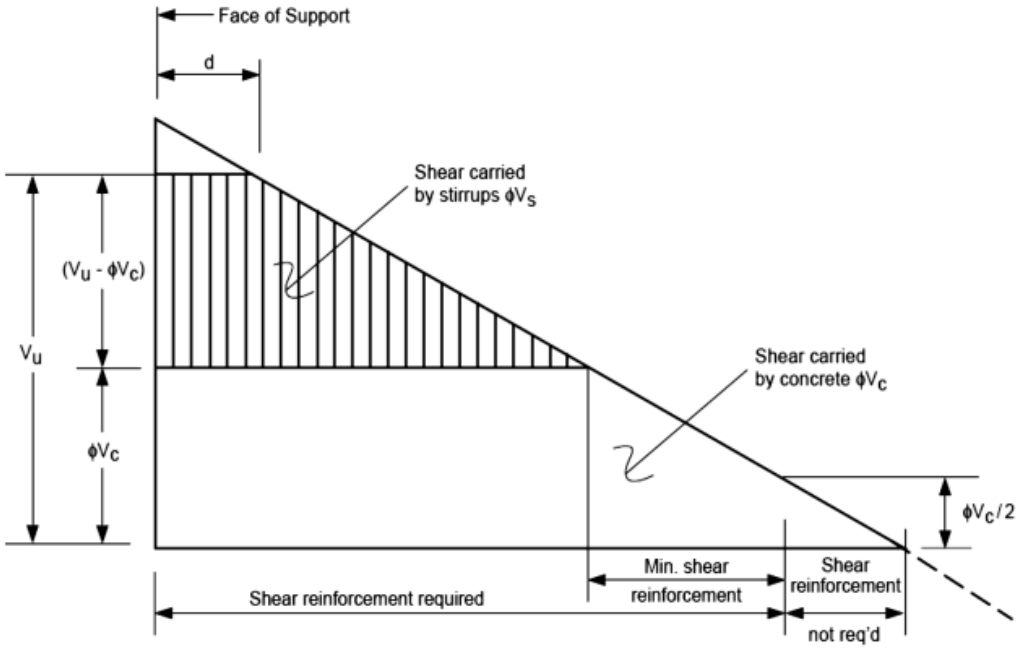

Figure (4-10) Shear diagonal.

Check for dimensions:

According to (ACI), V_s **shall not be taken grater than** $V_{s,max} = \frac{2}{3}\sqrt{f_c'}\ b_w d$ **, So :**

If $V_s > V_{s,max}$ **the section must be enlarged (Dimensions are not enough) where:**

$$V_s = V_n - V_c = \frac{V_u}{\emptyset} - V_c$$

Case I:

$$V_u \leq \frac{1}{2}\emptyset V_c \qquad -\ NO\ shear\ reinforcement\ is\ requered.$$

Case II:

$$\frac{1}{2}\emptyset V_c < V_u \leq \emptyset V_c \qquad -\ Minimum\ shear\ reinforcement\ is\ requered\ (A_{v,min})$$

$$A_{v,min} = \frac{1}{16}\cdot\sqrt{f_c'}\cdot\frac{b_w\, s}{f_{yt}} \geq \frac{1}{3}\cdot\frac{b_w\, s}{f_{yt}}$$ **, Or in the form:**

$\left(\frac{A_{v,min}}{S}\right)$ **the maximum of** $\geq \frac{1}{3}\cdot\frac{b_w}{f_{yt}}$

$\geq \frac{1}{16}\cdot\sqrt{f_c'}\cdot\frac{b_w}{f_{yt}}$

Here:

$$S_{max} \leq \frac{d}{2} \quad or \quad S_{max} \leq 600\ mm$$

Where:

S : $step\ of\ stirrups$ $(spacing\ between\ stirrups)$.
f_{yt} : $yield\ stress\ of\ stirrups$.

Case III:

$$\emptyset V_c < V_u \leq \emptyset(V_c + V_{s,min})$$

$$\left(\frac{A_{v,min}}{S}\right) = \frac{V_{s,min}}{f_{yt}\, d} \rightarrow \quad V_{s,min} = \left(\frac{A_{v,min}}{S}\right) f_{yt}\, d$$

Then, $V_{s,min}$ is the maximum of:

$$V_{s,min} = \frac{1}{16} \cdot \sqrt{f_c'}\, b_w \cdot d \quad , \quad V_{s,min} = \frac{1}{3}\, b_w\, d$$

Minimum shear reinforcement is provided ($A_{v,min}$) with:

$$S_{max} \le \frac{d}{2} \quad or \quad S_{max} \le 600\ mm$$

Case IV:

$$\emptyset(V_c + V_{s,min}) < V_u \le \emptyset(V_c + V_{s'}) \quad - stirrups\ are\ required$$

Where: $V_{s,min} < V_s \le V_{s'}$, $V_s = V_n - V_c = \frac{V_u}{\emptyset} - V_c$, $V_{s'} = \frac{1}{3}\sqrt{f_c'}\, b_w\, d$

$$\left(\frac{A_v}{S}\right) = \frac{V_s}{f_{yt}\, d}$$

Here:

$$S_{max} \le \frac{d}{2} \quad or \quad S_{max} \le 600\ mm$$

Case V:

$$\emptyset(V_c + V_{s'}) < V_u \le \emptyset(V_c + V_{s,max}) \quad - stirrups\ are\ required$$

Where: $V_{s'} < V_s \le V_{s,min}$, $V_s = V_n - V_c = \frac{V_u}{\emptyset} - V_c$, $V_{s'} = \frac{1}{3}\sqrt{f_c'}\, b_w\, d$

$$V_{s,max} = \frac{2}{3}\sqrt{f_c'}\, b_w d \quad \text{And} \quad \left(\frac{A_v}{S}\right) = \frac{V_s}{f_{yt}\, d}$$

Here:

$$S_{max} \le \frac{d}{2} \quad or \quad S_{max} \le 300\ mm$$

The shear envelops of Rib that we consider to design it (R25) is:

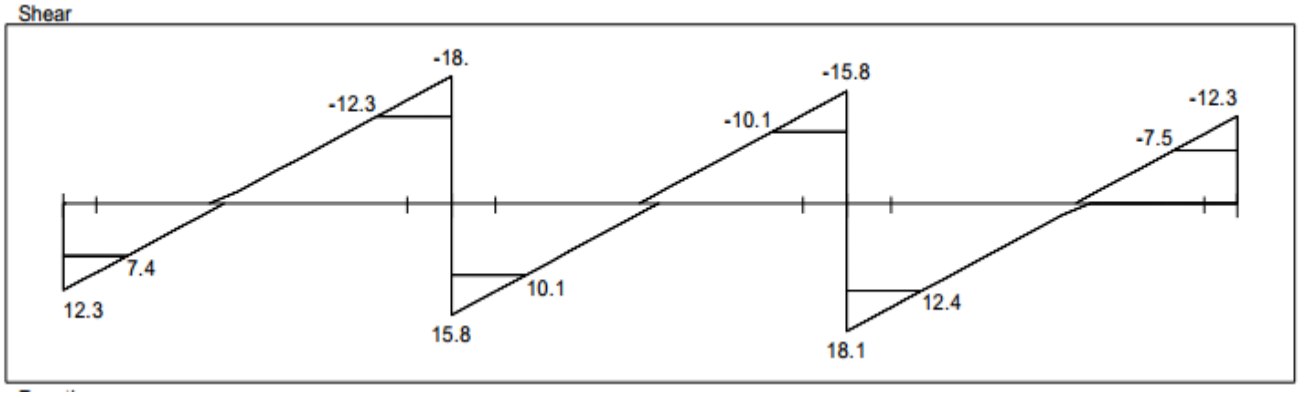

Figure (4-11) Shear envelop diagram.

The maximum shear force at the distance d from the face of support $V_u = 12.4\ kN$.

According to (ACI) Shear strength, V_C provided by concrete for the ribs may be taken 10% greater than that for beams. This is mainly due to the interaction between the slab and the closely spaced ribs.

$$V_n = \frac{V_u}{\emptyset}$$

$$V_C = 1.1 \times \frac{1}{6}\sqrt{f_c'}\ b_w d = 1.1 \times \frac{1}{6}\sqrt{24} \cdot 120 \cdot 284 = 30.6\ kN$$

$$\emptyset V_C = 0.75 \cdot 30.6 = 22.95\ kN$$

$$\frac{1}{2}\emptyset V_C = \frac{22.95}{2} = 11.47\ kN < V_u = 12.4\ kN < \emptyset V_C = 22.95\ kN$$ - Case II

So, Minimum shear reinforcement is required.

$\left(\frac{A_{v,min}}{S}\right)$ **the maximum of**

$$\geq \frac{1}{3} \cdot \frac{b_w}{f_{yt}} = \frac{1}{3} \times \frac{120}{420} = 95.23 \times 10^{-3} \quad -controled$$

$$\geq \frac{1}{16} \cdot \sqrt{f_c'} \cdot \frac{b_w}{f_{yt}} = \frac{1}{16} \times \sqrt{24} \times \frac{120}{420} = 87.48 \times 10^{-3}$$

Try $\emptyset 8\ stirrup\ (2\ legs)\ with\ A_{v,\emptyset 8} = 100.53\ mm^2$

$$\frac{100.55}{S} = 95.23 \times 10^{-3} \quad \rightarrow \quad \boldsymbol{S = 1055.86\ mm}$$

But:

$$\boldsymbol{S_{max} \leq \frac{d}{2} = \frac{284}{2} = 142\ mm \quad or \quad S_{max} \leq 600\ mm}$$

Use $\boldsymbol{\emptyset 8 @ 12.5\ cm < S_{max} = 14.2\ cm}$

4-5 | Design of Beam (B,G,19)

Figure (4-7) shows the location of rib in slab drawing plan.

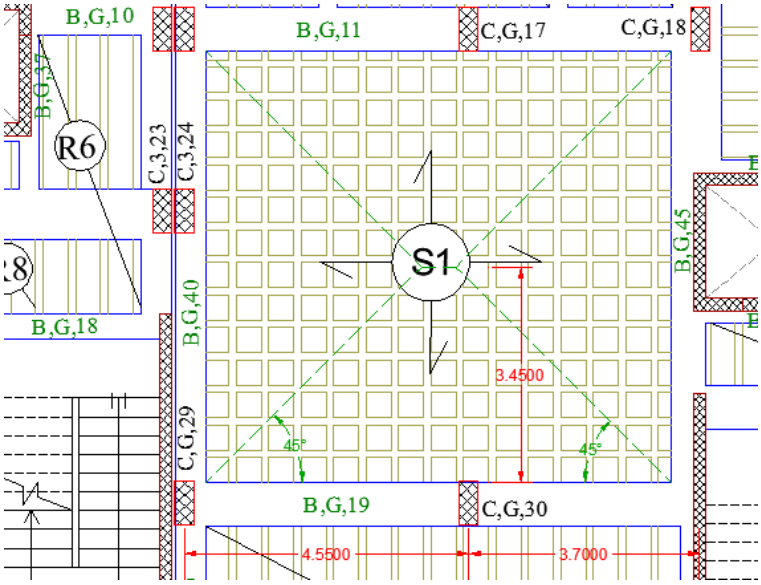

Figure (4-12) location of Beam (B.G.19) in slab drawing plan.

4-5-1 Beam (B.G.19) geometry:

Figure (4-13) shows the geometry of beam that considered to design and it's statically system with section of $(70 \times 32\ cm)$ **Hidden beam:**

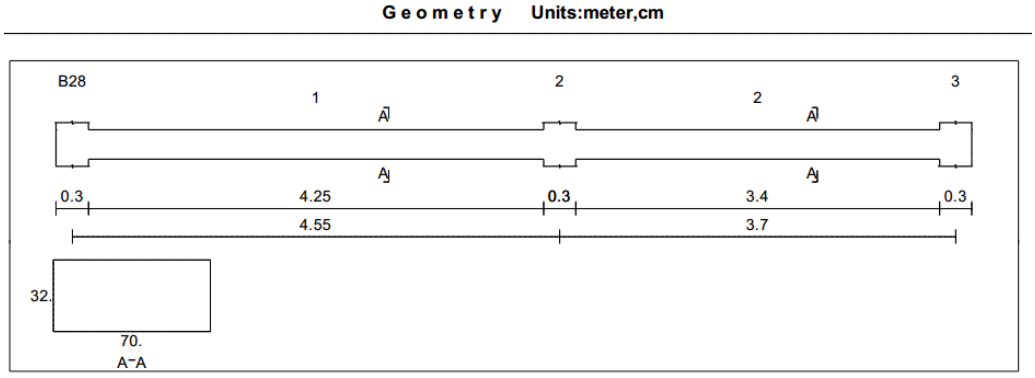

Figure (4-13) Beam (B.G.19) geometry.

4-5-1 Load calculations for Beam:

There are 3 sources of load that accts on beam.

1. **The own weight of the beam and the weights of floor layers within the beam width as a uniform (dead load).**
2. **The load that comes from rib (R15) as a uniform (dead and live loads).**
3. **The load that comes from two way ribbed slab as a uniform (dead and live loads).**

The following is the description for each one:

4-5-1-1 | the own weight of beam:

Table (4-4) shows the own weight of the beam and the weights of floor layers within the beam width:

Dead Load Form	Thickness δ (m)	Unit weight γ $(\frac{kN}{m^3})$	$\gamma \times \delta \times 1$ $(\frac{kN}{m})$
Tiles	0.03	23	$0.03 \times 23 \times 0.7 = 0.483$
Mortar	0.03	22	$0.03 \times 22 \times 0.7 = 0.483$
Coarse Sand	0.07	17	$0.07 \times 17 \times 0.7 = 0.833$
RC Beam	0.32	25	$0.32 \times 25 \times 0.7 = 5.6$
Plaster	0.03	22	$0.03 \times 22 \times 0.7 = 0.462$
Interior Partitions			$1 \times 1 = 1$
$\sum service\ D_L$			8.84 $(\frac{kN}{m})$

4-5-1-2 | the load that comes from rib (R15):

Its equals the reactions of (R15) divided on reputational unit (0.52 m), Figure (4-14) shows the reactions of rib (R15) on beam (B.G.19):

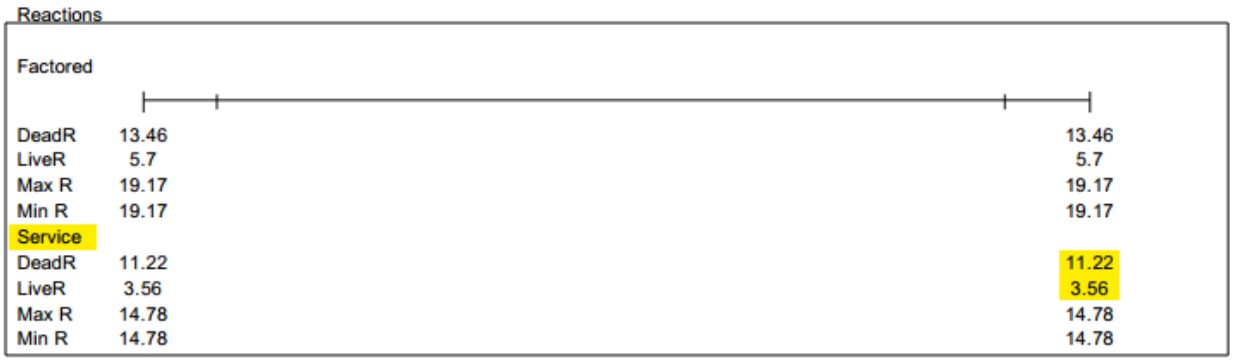

Figure (4-14) Reactions of rib (R15).

So that:

$$service\ D_L = \frac{11.22}{0.52} = 21.57\ \left(\frac{kN}{m}\right) \quad , \quad service\ L_L = \frac{3.56}{0.52} = 6.84\ \left(\frac{kN}{m}\right)$$

4-5-1-3 | the load that comes Two way ribbed slab:

The load that comes from two way ribbed slab as a trapezoidal load as in Figure (4-15):

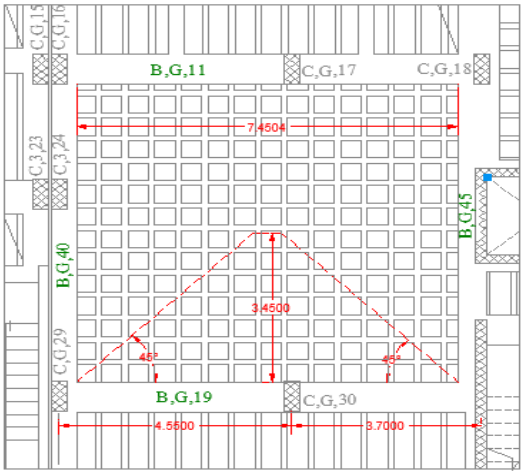

Figure (4-15) trapezoidal load on beam (B.G.19)

Dead Load Form	Thickness δ (m)	Unit weight γ $(\frac{kN}{m^3})$	$\gamma \times \delta \times 1$ $(\frac{kN}{m})$
Tiles	0.03	23	$0.03 \times 23 \times 0.52^2 = 0.178$
Mortar	0.03	22	$0.03 \times 22 \times 0.52^2 = 0.178$
Coarse Sand	0.07	17	$0.07 \times 17 \times 0.52^2 = 0.322$
RC Topping	0.32	25	$0.08 \times 25 \times 0.52^2 = 0.541$
RC Rib	0.08	25	$0.24 \times 0.12 \times 25 \times (0.52 + 0.4) = 0.662$
Concrete Block	0.24	10	$0.24 \times 10 \times 0.4^2 = 0.384$
Plaster	0.03	22	$0.03 \times 22 \times 0.52^2 = 0.178$
Interior Partitions			$1 \times 0.52^2 = 0.270$
$\sum service\ D_L$			2.85 $(\frac{kN}{m})$

Table (4-5) Dead Load calculations of two way Ribbed Slab.

$$D_L = \frac{2.85}{0.52 \times 0.52} = 10.54\ \left(\frac{kN}{m^2}\right) \quad , \quad L_L = 2\ \left(\frac{kN}{m^2}\right)$$

$$service\ D_L = \frac{1}{2} L_s w = \frac{1}{2} \times 6.9 \times 10.54 = 36.36\ \left(\frac{kN}{m}\right)$$

$$service\ L_L = \frac{1}{2} L_s w = \frac{1}{2} \times 6.9 \times 2 = 6.9\ \left(\frac{kN}{m}\right)$$

So, the load input to analysis seems like in **Figure (4-16):**

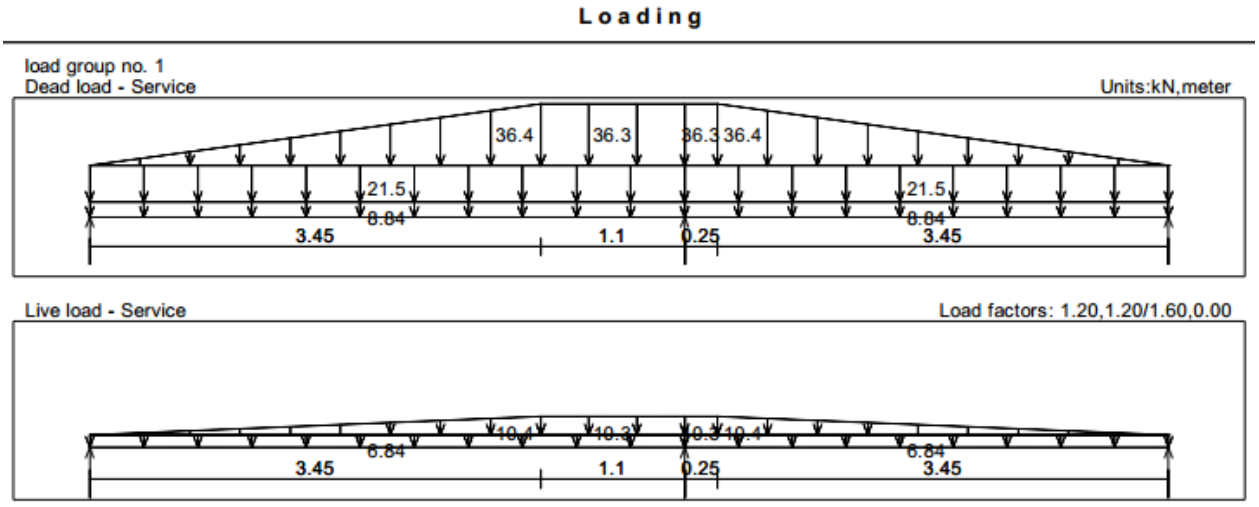

4-5-2 Design Rib for Flexure of Beam:

The envelope moment diagrams (for all load combinations). Using the structural analysis and design program (Atir 12), in **Figure (4-17):**

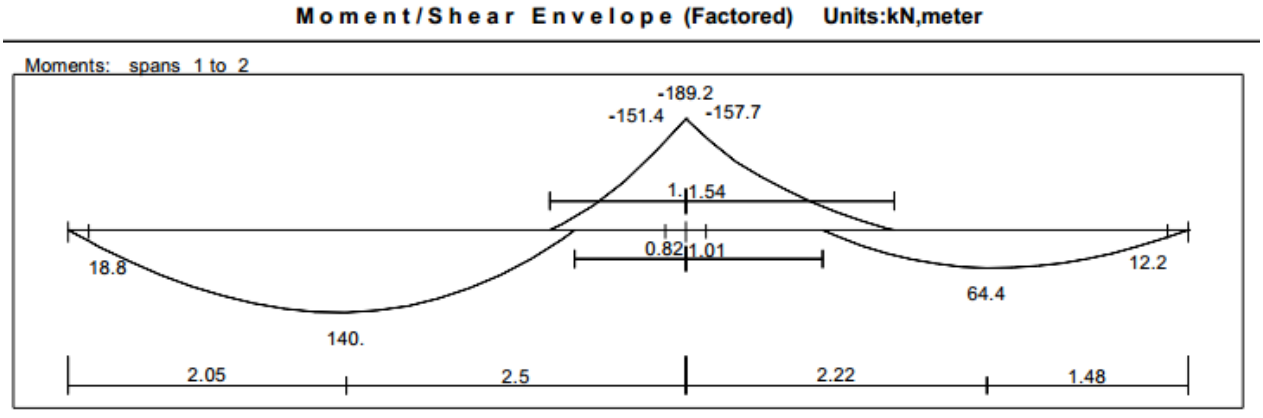

Figure (4-17) Envelope moment diagram for Beam (B.G.19).

Design of positive moments:

Assume bar diameter ∅ 18 for main positive reinforcement.

$$d = h - cover - d_{stirrups} - \frac{d_b}{2} = 320 - 40 - 10 - \frac{18}{2} = 261\ mm$$

The maximum positive moment in all spans of (B.G.19) $M_u = +140\ kN.m$

$$R_n = \frac{M_u}{\emptyset bd} = \frac{140 \times 10^6}{0.9 \cdot 700 \cdot 261^2} = 3.26\ MPa$$

$$m = \frac{f_y}{0.85\ f_c'} = \frac{420}{0.85 \cdot 24} = 20.58$$

$$\rho = \frac{1}{m}\left(1 - \sqrt{1 - \frac{2R_n m}{f_y}}\right) = \frac{1}{20.58}\left(1 - \sqrt{1 - \frac{2 \cdot 3.26 \cdot 20.58}{420}}\right) = 0.0085$$

$$A_s = \rho bd = 0.0085 \cdot 700 \cdot 261 = 1552.95\ mm^2$$

Check for $A_{s,min}$:

$$A_{s,min} = 0.25\ \frac{\sqrt{f_c'}}{f_y} \cdot b_w d\ \geq\ \frac{1.4}{f_y}\ b_w d$$

$$A_{s,min} = 0.25\ \frac{\sqrt{24}}{420} \cdot 700 \cdot 261 = 532.76\ mm^2$$

$$A_{s,min} = \frac{1.4}{420} \cdot 700 \cdot 261 = 609\ mm^2\ - control$$

$$A_{s,req} = 1552.95\ mm^2 > A_{s,min} = 609\ mm^2 \quad - OK$$

Use 7∅18 $with\ A_s = 17.78\ cm^2\ >\ A_{s,req} = 15.52\ cm^2$

Check for strain:

$$a = \frac{A_s f_y}{0.85\ f_c' b} = \frac{1778 \cdot 420}{0.85 \cdot 24 \cdot 700} = 52.294\ mm$$

$$c = \frac{a}{\beta_1} \quad , \quad \beta_1 = 0.85$$

$$c = \frac{52.29}{0.85} = 61.51\ mm$$

$$\varepsilon_s = 0.003\left(\frac{d-c}{c}\right) = 0.003\left(\frac{261-61.51}{61.51}\right) = 0.0097 > 0.005 \quad -OK$$

Check for bar placement:

$$S_b = \frac{700 - 40\times 2 - 10\times 2 - 7\times 18}{6} = 79\ mm\ > 25\ mm \quad -OK$$

Design of positive moment $M_u = +64.4\ kN.m$

Also assume bar diameter $\emptyset\ 18$

$$d = h - cover - d_{stirrups} - \frac{d_b}{2} = 320 - 40 - 10 - \frac{18}{2} = 261\ mm$$

$$R_n = \frac{M_u}{\emptyset bd} = \frac{64.4\times 10^6}{0.9\cdot 700\cdot 261^2} = 1.5\ MPa$$

$$m = 20.58$$

$$\rho = \frac{1}{m}\left(1 - \sqrt{1 - \frac{2R_n m}{f_y}}\right) = \frac{1}{20.58}\left(1 - \sqrt{1 - \frac{2\cdot 1.5\cdot 20.58}{420}}\right) = 0.00371$$

$$A_s = \rho bd = 0.00371\cdot 700\cdot 261 = 677.81\ mm^2$$

Check for $A_{s,min}$ **:**

$$A_{s,min} = 0.25\ \frac{\sqrt{f_c'}}{f_y}\cdot b_w d\ \geq\ \frac{1.4}{f_y}\ b_w d$$

$$A_{s,min} = 0.25\ \frac{\sqrt{24}}{420}\cdot 700\cdot 261 = 532.76\ mm^2$$

$$A_{s,min} = \frac{1.4}{420}\cdot 700\cdot 261 = 609\ mm^2\ -control$$

$A_{s,req} = 677.81\ mm^2 > A_{s,min} = 609\ mm^2 \quad -OK$

Use $4\emptyset 16$ with $A_s = 8.04\ cm^2 > A_{s,req} = 6.77\ cm^2$

Check for strain:

$$a = \frac{A_s f_y}{0.85\, f_c' b} = \frac{804 \cdot 420}{0.85 \cdot 24 \cdot 700} = 23.64\ mm$$

$$c = \frac{a}{\beta_1} \quad , \quad \beta_1 = 0.85$$

$$c = \frac{23.64}{0.85} = 27.81\ mm$$

$$\varepsilon_s = 0.003\left(\frac{d-c}{c}\right) = 0.003\left(\frac{261 - 27.81}{27.81}\right) = 0.0251 > 0.005 \quad -OK$$

Check for bar placement:

$$S_b = \frac{700 - 40 \times 2 - 10 \times 2 - 4 \times 16}{3} = 178.6\ mm > 25\ mm \quad -OK$$

Design of Negative moment $M_u = -157.7\ kN.m$

Assume bar diameter $\emptyset$ 20 for main positive reinforcement.

$$d = h - cover - d_{stirrups} - \frac{d_b}{2} = 320 - 40 - 10 - \frac{20}{2} = 260\ mm$$

$$R_n = \frac{M_u}{\emptyset b d} = \frac{157.7 \times 10^6}{0.9 \cdot 700 \cdot 260^2} = 3.7\ MPa$$

$$m = 20.58$$

$$\rho = \frac{1}{m}\left(1 - \sqrt{1 - \frac{2R_n m}{f_y}}\right) = \frac{1}{20.58}\left(1 - \sqrt{1 - \frac{2 \cdot 3.7 \cdot 20.58}{420}}\right) = 0.00979$$

$$A_s = \rho b d = 0.00979 \cdot 700 \cdot 260 = 1781.78\ mm^2$$

Check for $A_{s,min}$:

$$A_{s,min} = 0.25\,\frac{\sqrt{f_c'}}{f_y}\cdot b_w d \;\geq\; \frac{1.4}{f_y}\,b_w d$$

$$A_{s,min} = 0.25\,\frac{\sqrt{24}}{420}\cdot 700\cdot 260 = 530.72\ mm^2$$

$$A_{s,min} = \frac{1.4}{420}\cdot 700\cdot 260 = 606.67\ mm^2\ -control$$

$$A_{s,req} = 1781.78\ mm^2 > A_{s,min} = 606.67\ mm^2 \quad -OK$$

Use $6\emptyset 20$ $with$ $A_s = 18.84\ cm^2 > A_{s,req} = 17.81\ cm^2$

Check for strain:

$$a = \frac{A_s f_y}{0.85\,f_c' b} = \frac{1884\cdot 420}{0.85\cdot 24\cdot 700} = 55.41\ mm$$

$$c = \frac{a}{\beta_1} \quad , \quad \beta_1 = 0.85$$

$$c = \frac{55.41}{0.85} = 65.188\ mm$$

$$\varepsilon_s = 0.003\left(\frac{d-c}{c}\right) = 0.003\left(\frac{260-65.18}{65.18}\right) = 0.0089 > 0.005 \quad -OK$$

Check for bar placement:

$$S_b = \frac{700 - 40\times 2 - 10\times 2 - 6\times 20}{5} = 96\ mm > 25\ mm \quad -OK$$

4-4-5 Design Beam for Shear:

The shear envelops of beam (B.G.19) as shown in Figure (4-18):

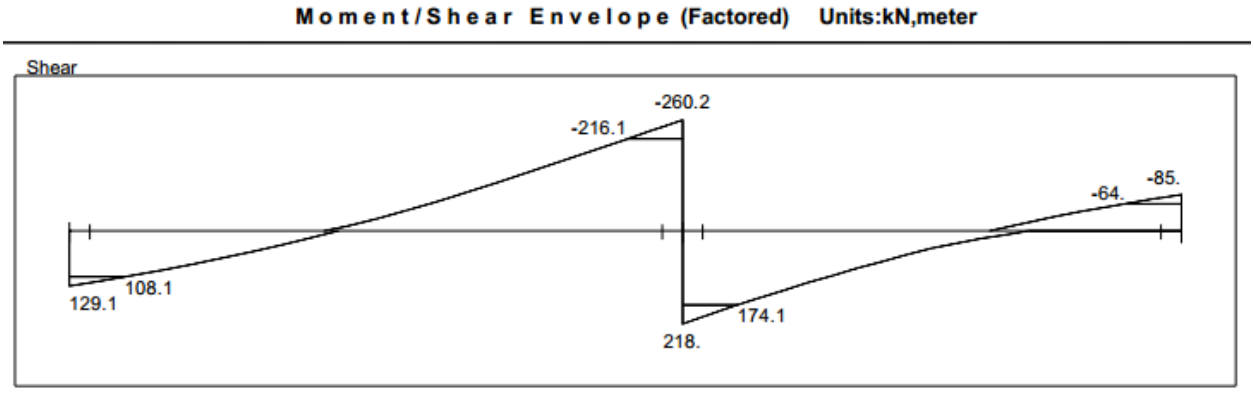

Figure (4-18) Shear envelop diagram of Beam.

The maximum shear force at the distance *d* from the face of support $V_u = 216\ kN$

For V_u = 216.1 kN

$$V_C = \frac{1}{6}\sqrt{f_c'}\ b_w d = \frac{1}{6}\sqrt{24}\cdot 700 \cdot 260 = 148.6\ kN$$

$$\emptyset V_C = 0.75 \cdot 148.6 = 111.45\ kN$$

Check cases:

Check Case III:

$$\emptyset V_c < V_u \leq \emptyset(V_c + V_{s,min})$$

$V_{s,min}$ **is the maximum of:**

$$V_{s,min} = \frac{1}{16}\cdot\sqrt{24}\cdot 700 \cdot 260 = 55.72\ kN$$

$$V_{s,min} = \frac{1}{3}\cdot 700 \cdot 260 = 60.67\ kN \qquad -controled$$

$V_u = 216.1\ kN > \emptyset(V_c + V_{s,min}) = 0.75\ (148.6 + 60.67) = 156.95\ kN$

Case III not satisfied.

Check Case IV:

$$\emptyset(V_c + V_{s,min}) < V_u \leq \emptyset(V_c + V_{s'})$$

$V_C = 148.6\ kN$

$V_{s'} = \frac{1}{3}\sqrt{f_c'}\ b_w\ d = \frac{1}{3} \times \sqrt{24}\ \times 700 \times 260 = 297.2\ kN$

$\emptyset(V_c + V_{s,min}) = 156.95\ kN < V_u = 216.1\ kN \leq \emptyset(V_c + V_{s'}) = 334.35 \quad -OK$

Shear reinforcement are required

$V_{s'} = \frac{V_u - \emptyset V_c}{\emptyset} = \frac{216.1 - 111.45}{0.75} = 139.4\ kN$

Use $\emptyset 10 \quad 4 legs\ with\ A_v = 316\ mm^2$

$S_{req} = \frac{420 \times 316 \times 260}{139.4 \times 10^3} = 247.54\ mm$

But:

$S_{max} \leq \frac{d}{2} \quad or \quad S_{max} \leq 600\ mm$

Select $2\emptyset 10\ @12\ cm$ stirups

For V_u = 174.1 kN

Check cases:

Check Case III:

$$\emptyset V_c < V_u \leq \emptyset(V_c + V_{s,min})$$

$V_u = 174.1\ kN > \emptyset(V_c + V_{s,min}) = 0.75\ (148.6 + 60.67) = 156.95\ kN$

Case III not satisfied.

Check Case IV:

$$\emptyset(V_c + V_{s,min}) < V_u \leq \emptyset(V_c + V_{s'})$$

$V_C = 148.6\ kN$

$V_{s'} = \frac{1}{3}\sqrt{f_c'}\ b_w\ d = \frac{1}{3} \times \sqrt{24}\ \times 700 \times 260 = 297.2\ kN$

$\emptyset(V_c + V_{s,min}) = 156.95\ kN < V_u = 174.1\ kN \leq \emptyset(V_c + V_{s'}) = 334.35 \quad -OK$

Shear reinforcement are required

$V_{s'} = \frac{V_u - \emptyset V_c}{\emptyset} = \frac{174.1 - 111.45}{0.75} = 83.53\ kN$

Use $\emptyset 8 \quad 4 legs\ with\ A_v = 201\ mm^2$

$S_{req} = \frac{420 \times 201 \times 260}{83.53 \times 10^3} = 262.7\ mm$

But:

$S_{max} \leq \frac{d}{2} \quad or \quad S_{max} \leq 600\ mm$

Select $2\emptyset 8\ @12\ cm$ stirups

4-6 | **Design of Two Way Ribbed Slab:**

4-6-1 Position of Slab:

This two way ribbed slab locating in ground floor as demonstrated in figure (4-19).

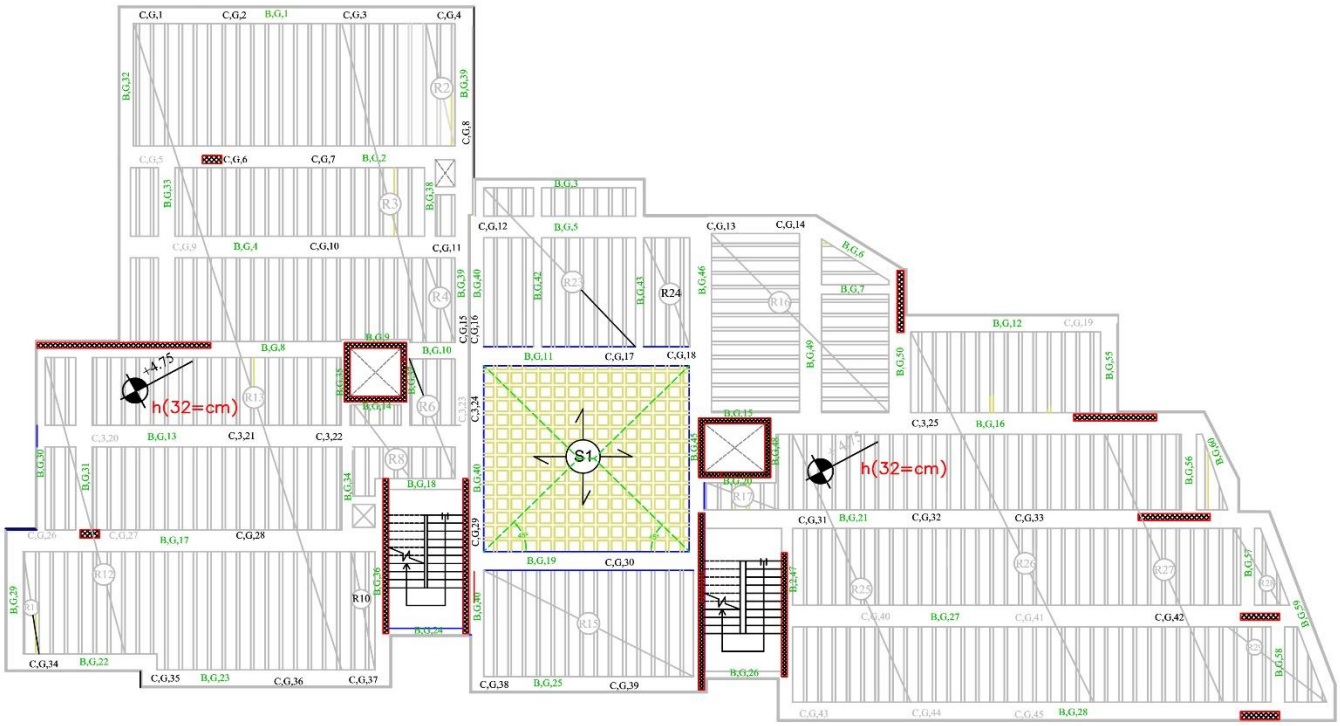

Figure (4-19) the positon of two way ribbed slab in ground floor.

4-6-2 Statically system of Slab:

The figure (4-20) demonstrate the statically system of two way ribbed slab:

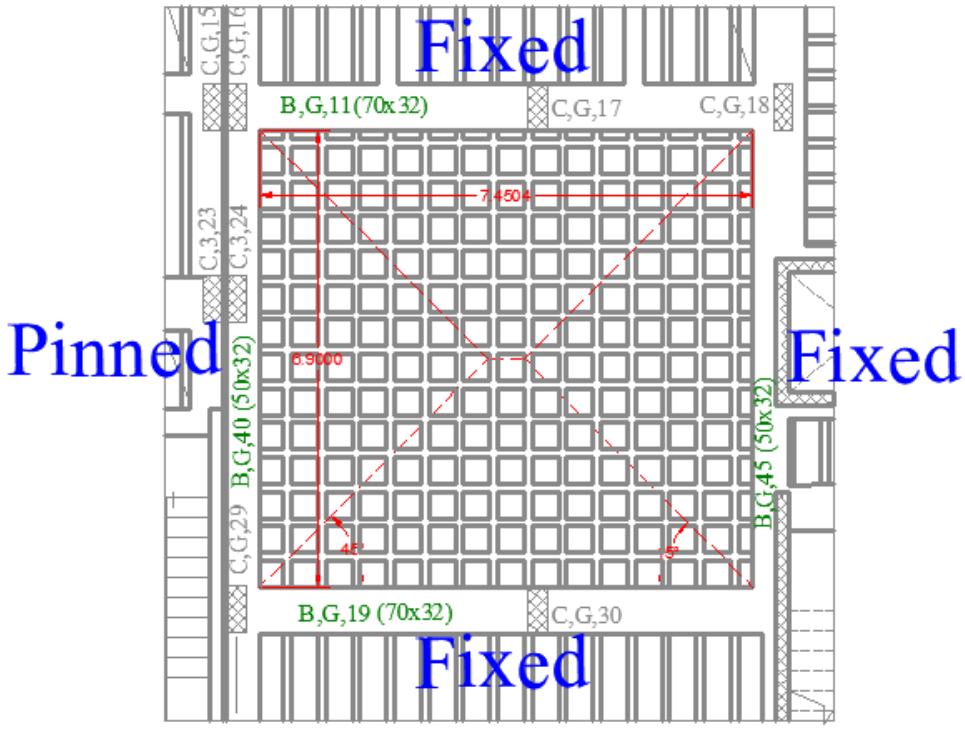

Figure (4-20) the statically system of two way ribbed slab.

4-6-3 Calculations of minimum thickness of two way ribbed slab:

Minimum thickness of two way h_{min} is based on the stiffness ratio between the beam and the slab that will be carried from the beam.

Assuming that $h_{min} = 32\ cm$

- **Stiffness of slab:**

  Moment of inertia of rib:

$$y' = \frac{8 \times 52 \times 4 + 12 \times 24 \times 20}{8 \times 52 + 12 \times 24} = 10.54\ cm.$$

$$I_{rib} = \frac{52 \times 8^3}{12} + \frac{12 \times 24^3}{12} + 8 \times 52 \times 6.54^2 + 12 \times 24 \times 9.46^2 = 5.9609 \times 10^{-4}\ m^4$$

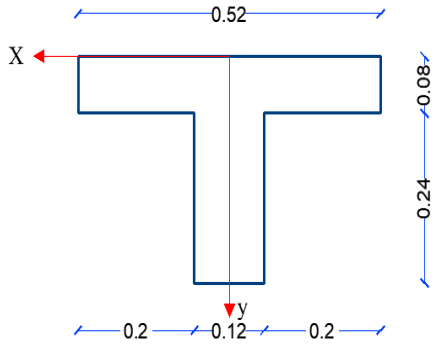

Figure (4-21): rib geometry

- **stiffness of Beams:**

for beams (B,G,40 , B,G,45) Rectangular section 50x32 as shown in Figuer (4-22) :

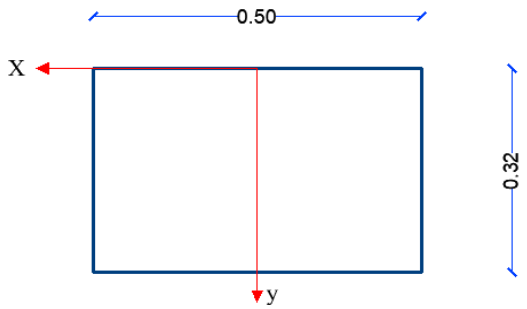

Figure (4-22): B,G,40 geometry.

$$y' = \frac{50 \times 32 \times 16}{50 \times 32} = 16\ cm.$$

$$I_{B,G,40,45} = \frac{50 \times 32^3}{12} = 13.6533 \times 10^{-4}\ m^4$$

for beams (B,G,19 , B,G,11) Rectangular section 70x32 :

$$y' = \frac{70 \times 32 \times 16}{70 \times 32} = 16\ cm.\ ,\quad I_{B,G,19,11} = \frac{70 \times 32^3}{12} = 19.1146 \times 10^{-4}\ m^4$$

- **For B,G,19 :**

$$I_{S19} = \frac{I_{rib} \cdot (\frac{l}{2} + \frac{l}{2} + b)}{b_{eff}} = \frac{5.9609 \times 10^{-4} \times (\frac{3.95}{2} + \frac{6.9}{2} + 0.7)}{0.52} = 70.2 \times 10^{-4}\ m^4$$

- **For B,G,11 :**

$$I_{S11} = \frac{I_{rib} \cdot (\frac{l}{2} + \frac{l}{2} + b)}{b_{eff}} = \frac{5.9609 \times 10^{-4} \times (\frac{4.05}{2} + \frac{6.9}{2} + 0.7)}{0.52} = 67.5794 \times 10^{-4}\ m^4$$

- **For B,G,40 :**

$$I_{S40} = \frac{I_{rib} \cdot (\frac{l}{2} + \frac{l}{2} + b)}{b_{eff}} = \frac{5.9609 \times 10^{-4} \times (0 + \frac{6.9}{2} + 0.7)}{0.52} = 47.5701 \times 10^{-4}\ m^4$$

- **For B,G,45 :**

$$I_{S45} = \frac{I_{rib} \cdot (\frac{l}{2} + \frac{l}{2} + b)}{b_{eff}} = \frac{5.9609 \times 10^{-4} \times (\frac{3.2}{2} + \frac{6.9}{2} + 0.7)}{0.52} = 65.9137 \times 10^{-4}\ m^4$$

- **stiffness Ratio** $\propto_f = \frac{I_b}{I_s}$ **:**

$$\alpha_{f19} = \frac{I_{b19}}{I_{S19}} = \frac{19.1146}{70.2} = 0.272 \quad , \quad \alpha_{f11} = \frac{I_{b11}}{I_{S11}} = \frac{19.1146}{67.5794} = 0.282$$

$$\alpha_{f40} = \frac{I_{b40}}{I_{S40}} = \frac{13.6533}{47.5701} = 0.287 \quad , \quad \alpha_{f45} = \frac{I_{b45}}{I_{S45}} = \frac{13.6533}{65.9137} = 0.209$$

$$\alpha_{fm} = \frac{\sum \alpha f}{4} = \frac{0.272+0.282+0.287+0.209}{4} = 0.2625 < 2.0\ ,\ \beta = \frac{Ln,long}{Ln,short} = \frac{7.45}{6.9} = 1.079$$

$$h_{min} = \frac{l_n(0.8+\frac{fy}{1400})}{36+5\beta(\alpha fm-0.2)} = \frac{7.45(0.8+\frac{420}{1400})}{36+5x1.079(0.2625-0.2)} = 22.55\ cm\ < 32\ cm\ \ldots OK$$

$h = 32\ cm\ >\ h_{min} = 22.55\ cm\ (8\ cm\ Topping + 24\ cm\ Block)$.

4-6-4 Load Calculations of two way ribbed slab:

As we calculated previously the load that acts on two way ribbed slab was equals:

$$D_L = \frac{2.85}{0.52 \times 0.52} = 10.54\ \left(\frac{kN}{m^2}\right) \quad , \quad L_L = 2\ \left(\frac{kN}{m^2}\right)$$

$W_{u,d} = 1.2(10.54) = 12.648\ \left(\frac{kN}{m}\right)$, *Total uniform dead load.*

$W_{u,l} = 1.6(2) = 3.2\ \left(\frac{kN}{m}\right)$, *Total uniform live load.*

Factored Load : $W_u = 1.2\ (10.54) + 1.6\ (2) = 15.848\ \left(\frac{kN}{m^2}\right)$.

4-6-5 Moments calculations by coefficient method:

- $span\ ratio = \frac{l_a}{l_b} = \frac{6.9}{7.45} \cong 0.9$,

  l_a: *short clear span* , l_b: *long clear span*

- **Coefficients (case 8):**

  Coefficients for negative moments in slab:

  $C_{a,neg} = 0.043$, $C_{b,neg} = 0.052$

  Coefficients for dead load positive moments in slab:

  $C_{a,dl} = 0.025$, $C_{b,dl} = 0.019$

  Coefficients for live load positive moments in slab:

  $C_{a,ll} = 0.035$, $C_{b,ll} = 0.024$

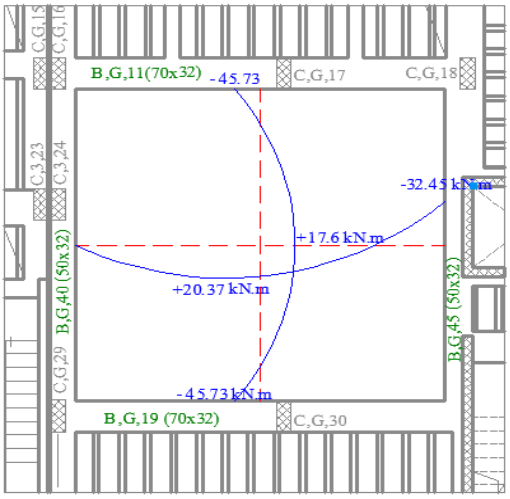

Figure (4-23): Moments in two way slab.

- **Moments:**

$$M_{a,neg} = C_{a,neg} \cdot W_u \cdot l_a{}^2 = 0.043 \times 15.848 \times 6.9^2 = 32.45\ kN.m$$

$$M_{a,positve} = M_{a,dl} + M_{a,ll} = [(0.025 \times 12.64 \times 6.9^2) + (0.035 \times 3.2 \times 6.9^2\ ]$$

$$= 20.37\ kN.m$$

$$M_{b,neg} = 0.052 \times 15.848 \times 7.45^2 = 45.73\ kN.m$$

$$M_{b,positve} = M_{b,dl} + M_{b,ll} = [(0.019 \times 12.64 \times 7.45^2) + (0.024 \times 3.2 \times 7.45^2]$$

$$= 17.6\ kN.m$$

4-6-6 Slab reinforcements:

Assume $2\emptyset12$ *Bottom Bars for* (*positive moments*)

$$d = 320 - 20 - 8 - \frac{12}{2} = 286\ mm$$

$$A_{s(2\emptyset12)} = 2 \times 113 = 226\ mm^2 > A_{smin} = \frac{1.4}{420} \times 120 \times 286 = 114.4\ mm^2$$

$$a = \frac{A_s f_y}{0.85\, f'_c b_w} = \frac{226 \times 420}{0.85 \times 24 \times 120} = 38.78\ mm \quad , x = \frac{a}{\beta_1} = \frac{38.78}{0.878} = 44.17\ mm$$

$$M_n = A_s f_y \left(d - \frac{a}{2}\right) = 226 \times 420 \times \left(286 - \frac{38.78}{2}\right) \times 10^{-6} = 25.3\ kN.m$$

$$M_u = \varphi M_n = 0.9 \times 25.3 = 22.77\ kN.m \quad (2\emptyset12\ covers\ positive\ moments)$$

check strain :

$$\varepsilon_s = 0.003\left(\frac{d-x}{x}\right) = 0.003\left(\frac{286-44.17}{44.17}\right) = 0.016 > 0.005 \quad , \varphi = 0.9 \ldots . OK$$

$\therefore$ *Use* $\emptyset12$ *for Bottom Bars*

Assume $\emptyset18$ *Top Bars for* (*Negative moments*)

$$d = 320 - 20 - 8 - \frac{18}{2} = 283mm$$

$$A_{s(2\emptyset18)} = 2 \times 254 = 508\ mm^2 > A_{smin} = \frac{1.4}{420} \times 120 \times 283 = 113.2\ mm^2$$

$$a = \frac{A_s f_y}{0.85\, f'_c b_w} = \frac{508 \times 420}{0.85 \times 24 \times 120} = 87.16\ mm \quad , x = \frac{a}{\beta_1} = \frac{87.16}{0.878} = 99.27\ mm$$

$$M_n = A_s f_y \left(d - \frac{a}{2}\right) = 508 \times 420 \times \left(283 - \frac{87.16}{2}\right) \times 10^{-6} = 51.08\ kN.m$$

$$M_u = \varphi M_n = 0.9 \times 51.08 = 45.972\ kN.m$$

check strain :

$$\varepsilon_s = 0.003\left(\frac{d-x}{x}\right) = 0.003\left(\frac{283-99.27}{99.27}\right) = 0.0056 > 0.005 \quad , \varphi = 0.9 \ldots . OK$$

$\therefore$ *Use* $\emptyset18$ *for Top Bars* (*long span*). , *Use* $\emptyset16$ *for Top Bars* (*short span*).

4-6-7 Design of shear:

Maximum shear coefficient will be in the short direction for the slab with boundary conditions as in case 8 , $W_a = 0.43$

- The total load on the panel$(6.9 \times 7.45 \times 15.848) = 815\ kN$.
- The total load per rib at face of the long beam is $\frac{(0.43 \times 815 \times 0.52)}{2 \times 7.45} = 12.23\ kN$

The shear critical section is at distance *d* from the beam face:

$$V_{ud} = V_{uface} - W_u \cdot b_{eff} \cdot d = (12.23 - 15.848 \times 0.52 \times 0.283) = 9.9\ kN$$

The shear strength of one rib in the slab is:

$$\emptyset V_c = 0.75 \times 1.1 \cdot \frac{1}{6} \times \sqrt{f'_c} \cdot b_w d = 0.75 \times 1.1 \left(\frac{1}{6}\right) \sqrt{24} \cdot 120 \cdot 283 \times 10^{-3} = 22.87\ kN$$

$$\frac{\emptyset V_c}{2} = \frac{22.87}{2} = 11.435\ kN > V_{ud} = 9.9\ kN$$

No need for shear reinforcement (exception for joist construction according to ACI).

Provide minimum shear reinforcement

Use Ø8 stirrups $A_{v,2Ø8}$ = 2 x 50 = 100 mm^2

$$\frac{A_{v,min}}{s} = \frac{b_w}{3\ f_y} = \frac{120}{3x420} = 0.1 \rightarrow \frac{100}{s} = 0.1 \rightarrow \text{s} = 1000 \text{ mm}$$

$$S_{max} \leq \frac{d}{2} \text{ and } \leq 600 \text{ mm} \qquad S_{max} = \frac{283}{2} 141.5 \text{ mm} < 600 \text{ mm}$$

$\therefore$ ***Use Ø8@20 cm c/c with 2legs***

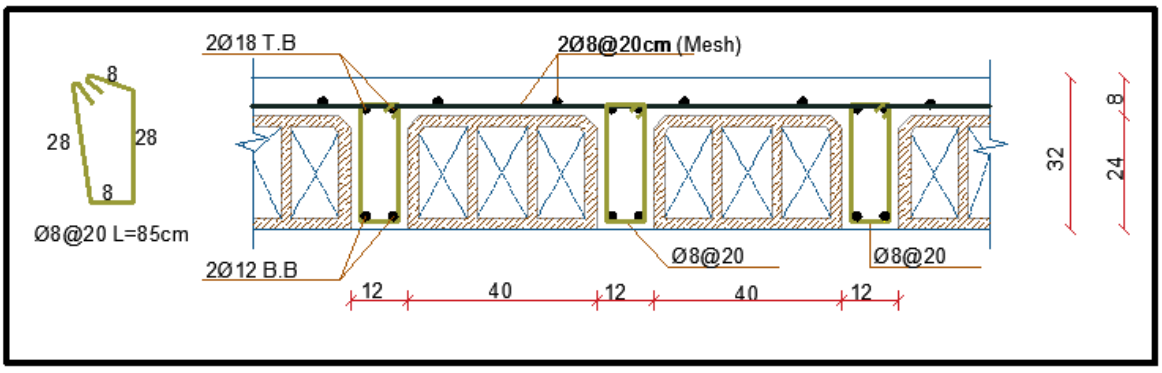

Figure (4-24): cross section in two way slab (long span).

4-7 | Design of Column (28), (N-9 Axis) First Floor.

4-7-1 Design Data:

The following table and figures gives the design parameters of column (28, N-9) First Floor:

Dead load (service)	**1910.5 *kN***
Live load (service)	**357 *kN***
Length	**2.93 *m***
k	**0.82 (*Braced*)**
b	**70 *cm***
h	**30 *cm***
f_y	**420 *Mpa***
f'_c	**24 *Mpa***
Concrete cover	**40 *mm***
Bar size	**∅20 *mm***
Type of load	***Concentrically Loaded***

Table (4-6): Design Data of column (28, N-9).

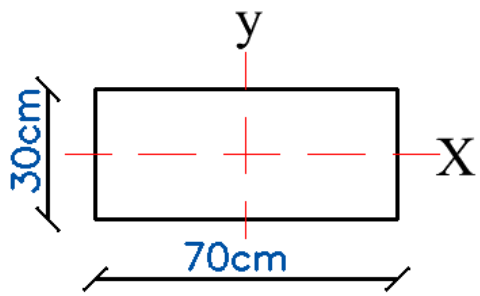

Figure (4-25):

cross sectiona of colums (28,N-9).

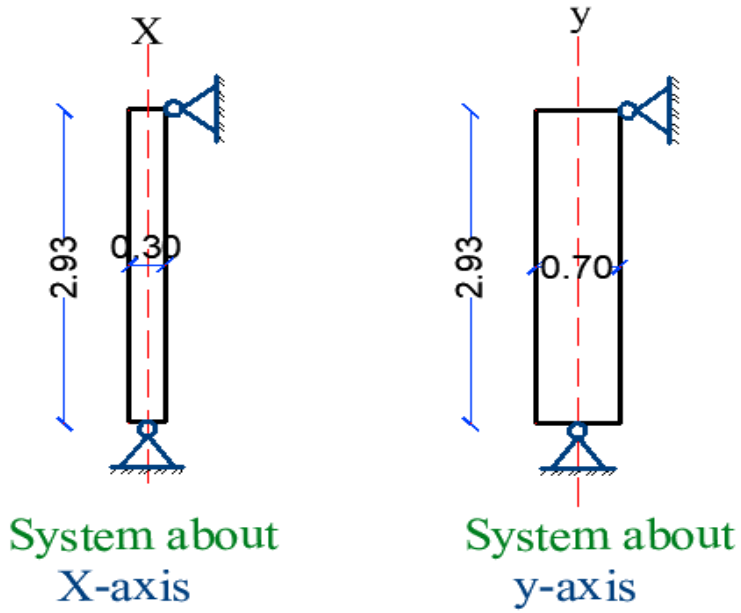

Figure (4-26): Longitudinal cross section of colums (28,N-9).

4-7-2 Factored Loads:

$$P_u = 1.2\,D + 1.6L$$

$$P_u = 1.2\,(1910.5) + 1.6(357) = 2863.8\,kN$$

4-7-3 Slenderness parameter:

- **System about X-axis:**

$$k = 0.82 \quad , \quad L_{u,x} = 2.93\,m \quad , \quad r_{,x} = 0.3\,h = 0.3 \times 0.3 = 0.09$$

$$\lambda_x = \frac{k \cdot L_x}{r_{,x}} = \frac{0.83 \times 2.93}{0.09} = 27 \;\leq 34 - 12\frac{M_1}{M_2} \leq 40\,, \quad \text{where } \frac{M_1}{M_2} = 1$$

$$= 27 \geq 22 \;\leq 40$$

$\therefore$ *column is long About* $- X$

(*minimum eccentricity* + *magnified moment*) *neede* !

- **System about y-axis:**

$$k = 0.82 \quad , \quad L_{uy} = 2.93\,m \quad , \quad r_{,x} = 0.3\,b = 0.3 \times 0.7 = 0.21$$

$$\lambda_y = \frac{k \cdot L_y}{r_{,y}} = \frac{0.83 \times 2.93}{0.21} = 11.58 \;\leq 34 - 12\frac{M_1}{M_2} \leq 40$$

$$= 11.58 \leq 22 \;\leq 40$$

$\therefore$ *column is Short About* $- y$

NO neede of (*minimum eccentricity* + *magnified moment*)

4-7-4 Prasler Formula:

$$\frac{1}{Pn} = \frac{1}{Pnx} + \frac{1}{Pny} - \frac{1}{p_o}$$

$$Pnx = p_o \;\longrightarrow\; \frac{1}{Pn} = \frac{1}{Pny}$$

4-7-5 Calculations of design moment (Buckling about x - $Pny - e_y$) :

$$e_{min} = 15 + 0.03h = 15 + 0.03 \times 300 = 24mm$$

$$e = \frac{M_u}{p_u} \quad \rightarrow \quad M_{ux} = e_{min} \cdot p_u = 0.024 \times 2863.8 = 68.74 \ kN.m$$

4-7-6 Calculations of magnification factor (δ_{ns}) :

$$\delta_{ns} = \frac{cm}{1-\frac{Pu}{0.75Pcr}} \ , \ c_m = \left(0.6 + 0.4\ \frac{M_1}{M_2}\right) = 0.6 + 0.4(1) = 1 \geq 0.4$$

$$p_{cr} = \frac{\pi^2\ E_1 I_1}{(k\ Lu)^2} \ , \ E_1 I_1 = \frac{0.4\ x\ 4750\sqrt{24}\ x\ \frac{700\ x\ 300^3}{12}}{1+\frac{1.2\ x\ 1910.5}{2863}} = 81.41\ (\frac{MN}{m^2})$$

$$p_{cr} = \frac{\pi^2(81.41)}{(0.83 \times\ 2.93)^2} = 135.85\ MN$$

Now:

$$\delta_{ns} = \frac{1}{1-\frac{2.863}{0.75(135.85)}} = 1.028\ > 1\ and\ < 1.4\ \ \ldots\ldots\ OK$$

Magnified moment:

$$M_c = \delta_{ns} \times M_{ux} = 1.028\ \times 68.74 = 70.67\ kN.m$$

4-7-7 Design:

$$M_c = 70.67\ kN.m \quad , \quad e = \frac{70.67}{2863.8} = 0.0246\ m$$

$$\frac{e}{h} = \frac{0.0246}{0.3} = 0.082 \ , \quad \frac{\gamma}{h} = \frac{300-2\times40-2\times10-20}{300} = 0.6$$

Assuming that $\rho = 0.03$

Interaction diagram:

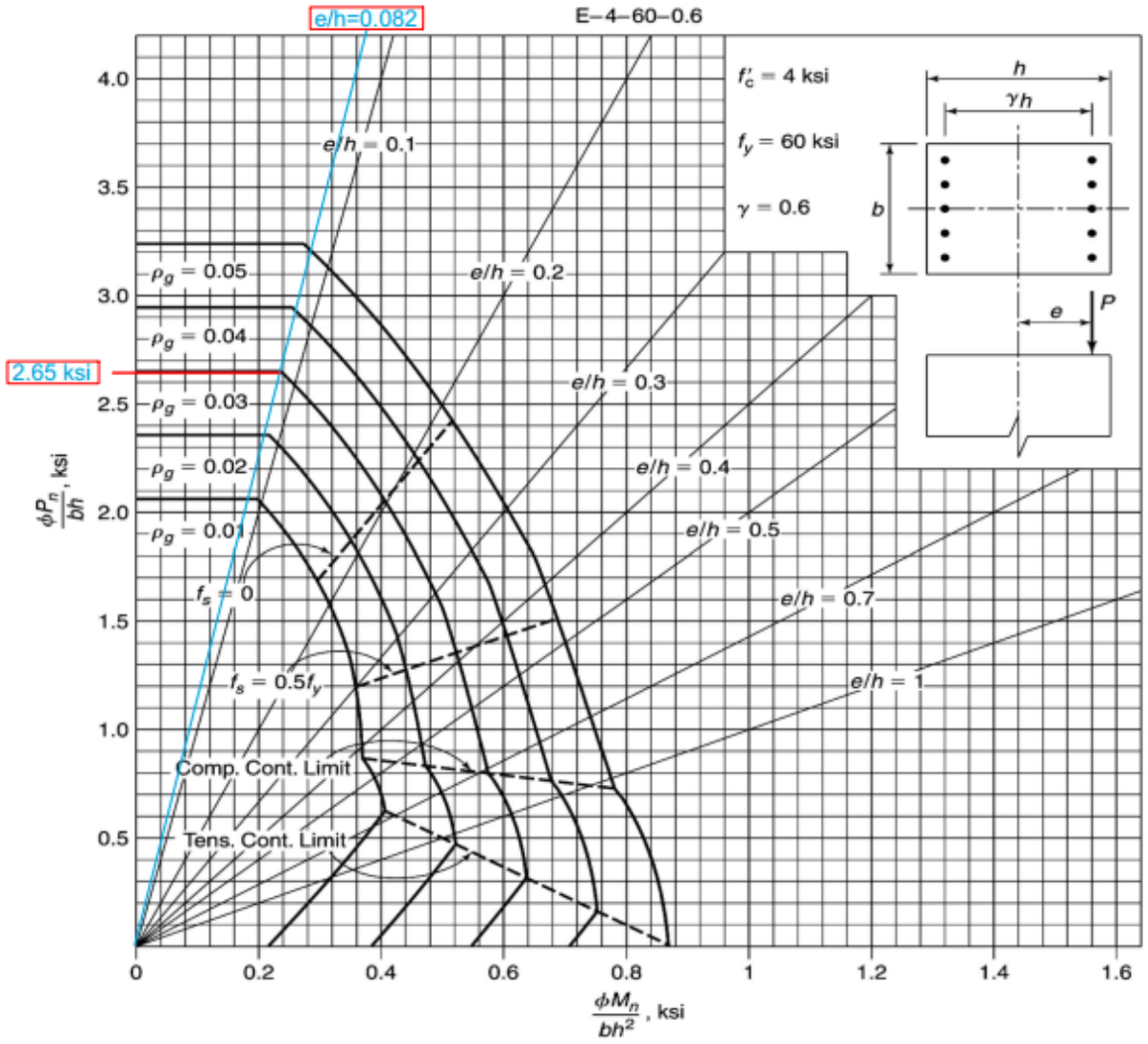

Figure (4-27): Interaction diagram of needed cross section of column.

$$\frac{\emptyset p_{ny}}{A_g} = 2.65\ ksi\ \times \frac{1000}{145} = 18.28\ MN$$

$$p_n = p_{ny} = 18.28\ MN\ \times \frac{0.7 \times 0.3}{0.65} = 5.91\ MN$$

$$\emptyset p_n = 0.65 \times 5.91 = 3.85\ MN > p_u = 2.863\ MN \ldots\ldots OK$$

$$A_{Sreq} = \rho_g \times A_g = 0.03 \times (30 \times 70) = 63\ cm^2$$

$$N_{\emptyset 20} = \frac{63}{3.14} = 20.03 \quad , \quad \text{Select } 20\emptyset 20$$

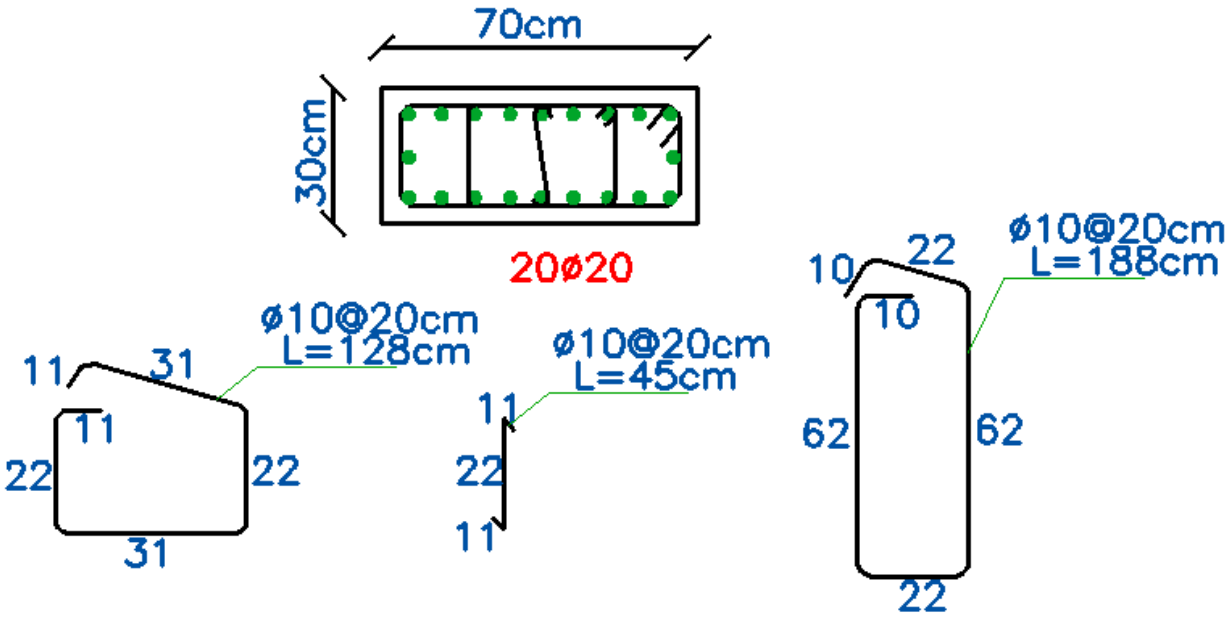

Figure (4-28): Reinforcement of cross section of column.

4-8 | Design of Staircase:

4-8-1 plan and materials of stair:

The following figure demonstrate the plan of stair that we consider to design it figure (4-29) which is carries a uniform live load of $L_l = 3\ \left(\frac{kN}{m^2}\right)$, $assuming\ rise\ of\ 170\ mm$, $and\ run\ of\ 300\ mm$, $f_{c'} = 24\ Mpa$, $f_y = 420\ Mpa$.

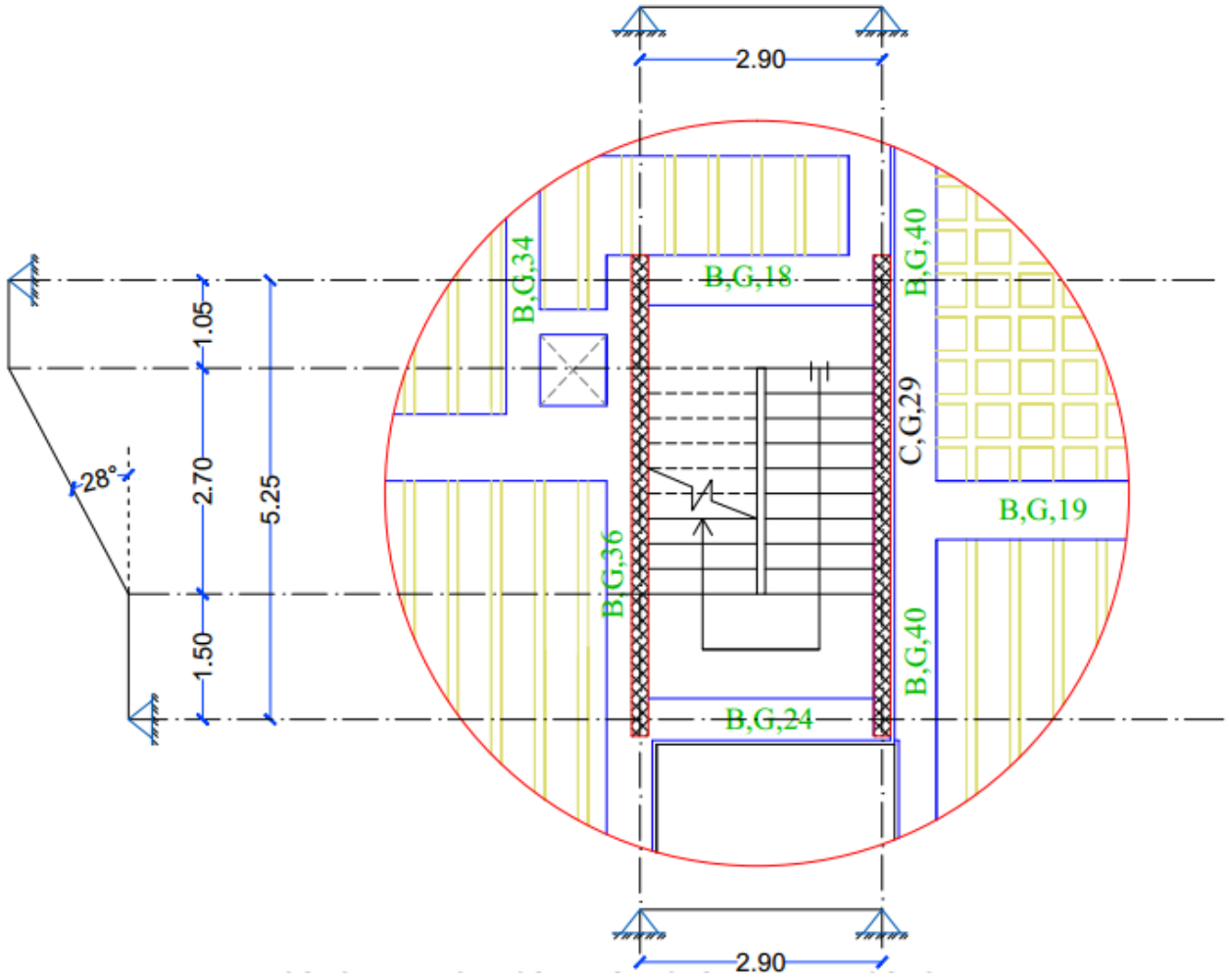

Figure (4-29): Stair Plan and structural system.

4-8-2 Structural system and minimum thickness:

1. **The structural system of this stair was taken as a simply supported (one-way solid slab) since that the flight of stair will be supported at the ends of upper and lower landings.**
2. **Minimum Slab thickness for deflection is (for simply supported one-way solid slab) is $h_{min} = \frac{L}{20} = \frac{525}{20} = 26.25\ cm$, but in this case presented here where the slab ends are cast white the supporting beams and additional negative reinforcement is provided , minimum thickness can be assumed to be $h_{min} = \frac{L}{28} = \frac{525}{28} = 18.75\ cm$.**

$$Take\ h_{min} = 20\ cm$$

4-8-3 Loads and Reactions calculations:

The applied live loads are based on the plan area (horizontal projection), while the dead load is based on the sloped length. To transform the dead load into horizontal projection the figure below explains how figure (4-30).

$$\theta = tan^{-1}\left(\frac{rise}{run}\right) = tan^{-1}\left(\frac{170}{300}\right) = 29.53^{\circ}$$

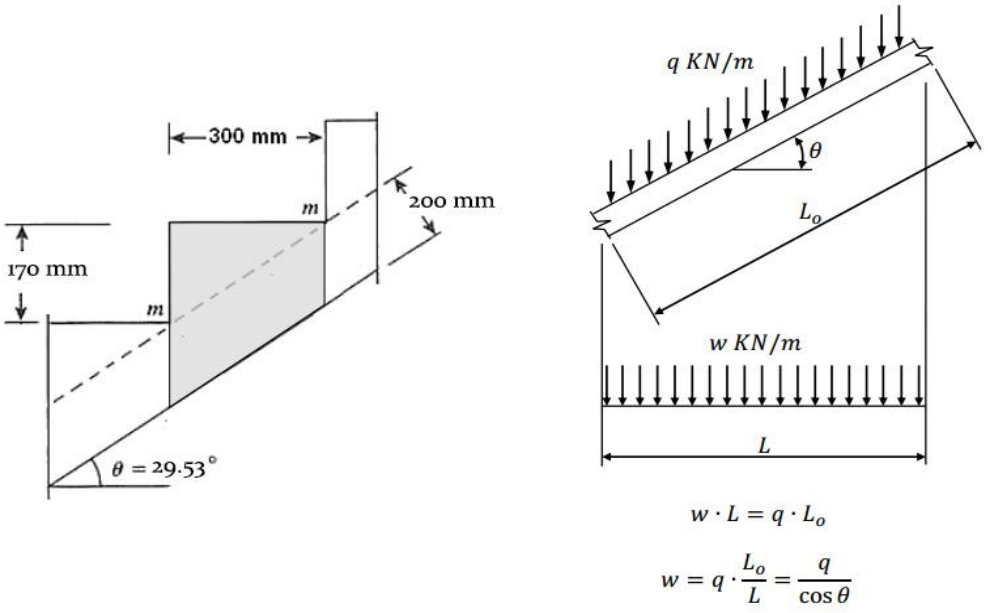

$$w \cdot L = q \cdot L_o$$

$$w = q \cdot \frac{L_o}{L} = \frac{q}{\cos\theta}$$

Figure (4-30): Transformation of dead load into horizontal projection.

- **Flight Dead Load computation:**

Table (4-7) shows Dead Load calculations on Flight of stair:

Dead Load Form	Unit weight γ $(\frac{kN}{m^3})$	w $(\frac{kN}{m})$
Tiles	**23**	$23 \times \left(\frac{0.170 + 0.35}{0.3}\right) \times 0.03 \times 1 = 1.196$
Mortar	**22**	$22 \times \left(\frac{0.170 + 0.3}{0.3}\right) \times 0.02 \times 1 = 0.689$
Stair steps	**25**	$\frac{25}{0.3} \times \left(\frac{0.170 \times 0.3}{2}\right) \times 1 = 2.125$
Reinforced concrete (solid slab)	**25**	$\frac{25 \times 0.20 \times 1}{cos\ 29.53} = 5.746$
plaster	**22**	$\frac{22 \times 0.03 \times 1}{cos\ 29.53} = 0.7585$
$\sum$ *Tota Dead loads* kN/m		10.511

Table (4-7) Dead Load calculations on flight.

- **Landing Dead Load computation:**

Table (4-8) shows Dead Load calculations on Landing of stair:

Dead Load Form	Unit weight γ $(\frac{kN}{m^3})$	$\gamma \times \delta \times 1$ $(\frac{kN}{m})$
Tiles	**23**	$23 \times 0.03 \times 1 = 0.69$
Mortar	**22**	$22 \times 0.03 \times 1 = 0.66$
Reinforced concrete (solid slab)	**25**	$25 \times 0.2 \times 1 = 5$
plaster	**22**	$22 \times 0.03 \times 1 = 0.66$
$\sum$ *Tota Dead loads* kN/m		7.01

Table (4-8) Dead Load calculations on Landing.

- **Live Load:** $L_l = 3\ \left(\frac{kN}{m^2}\right)$.
- **Total Factored Load:** $w = 1.2\ D_L + 1.6\ L_l$

For flight: $w = 1.2\,(10.511) + 1.6(3) = 17.42\ \left(\frac{kN}{m}\right)$.

For Landing: $w = 1.2\,(7.01) + 1.6(3) = 13.22\ \left(\frac{kN}{m}\right)$.

4-8-4 Design of flight:

Because the load on the landing is carried into two directions, only half the load will be considered in each direction $\frac{13.22}{2} = 6.61\ \left(\frac{kN}{m}\right)$**. as shown in figure (4-31).**

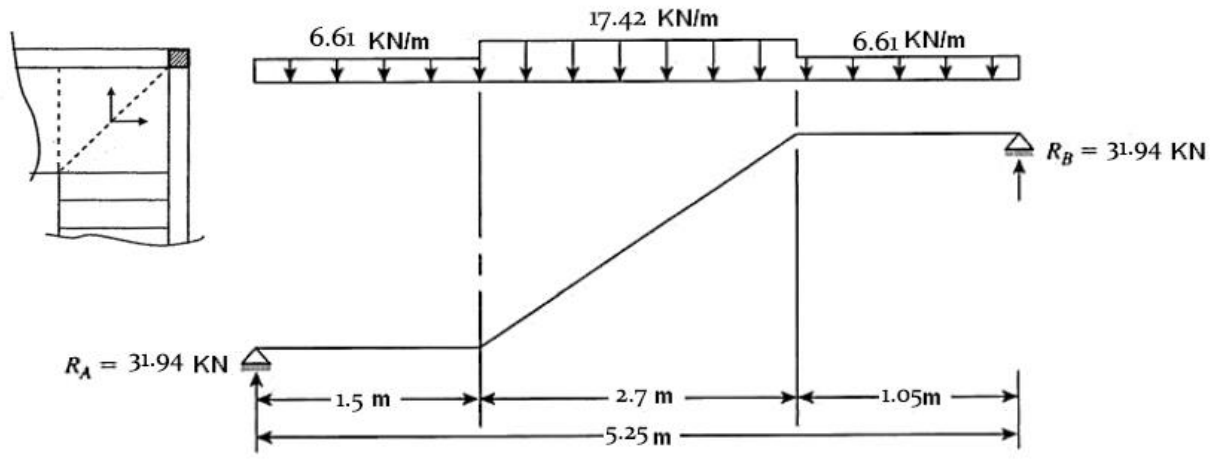

Figure (4-31): Loads and reactions on statically system of flight.

Shear and moment calculations:

- **Check for shear strength:**

  Assume bar diameter $\emptyset 12\ for\ main\ rinforcemnt$.

  $$d = h - cover - \frac{d_b}{2} = 200 - 20 - \frac{12}{2} = 174\ mm$$

  Assume beam width $50\ cm$

  $$V_u = 31.94 - 6.61 \times (0.25 + 0.174) = 29.137\ \ kN$$

  $$V_c = \frac{1}{6}\sqrt{f_{c'}}\, b_w d = \frac{1}{6} \times \sqrt{24} \times 1000 \times 174 = 142.07\ kN\ ..\ for\ 1\ m\ strip$$

$\phi = 0.75 - for\ shear$

$\phi V_c = 0.75 \times 142.07 = 106.55\ kN\ ..\ for\ 1m\ strip$

$V_{u,max} = 29.137\ kN < \frac{1}{2}\phi V_c = 53.27\ kN$

$\therefore$ *The thickness of the slab is adequate enough*

- **Calculation of maximum moment and steel reinforcement:**

$$M_{u,max} = 31.94 \times \left(\frac{5.25}{2}\right) - 6.61 \cdot (1.5) \cdot \left(1.5 + \frac{2.7}{2}\right) - 17.42\left(\frac{2.7}{2}\right)\left(\frac{2.7}{4}\right)$$

$$= 39.72\ kN.m\ /\ \text{m}$$

$assume\ bar\ diameter\ \emptyset 12\ for\ main\ rinforcemnt\ with\ , d = 174\ mm$

$$R_n = \frac{M_u}{\emptyset bd} = \frac{39.72 \times 10^6}{0.9 \times 1000 \times 174^2} = 1.457\ Mpa\ , m = \frac{f_y}{0.85\ f_c'} = \frac{420}{0.85 \times (24)} = 20.58$$

$$\rho = \frac{1}{m}\left(1 - \sqrt{1 - \frac{2R_n m}{f_y}}\right) = \frac{1}{20.58}\left(1 - \sqrt{1 - \frac{2 \cdot 1.457 \cdot 20.58}{420}}\right) = 0.0036$$

$A_s = \rho bd = 0.0036 \times 1000 \times 174 = 626.4\ mm^2$

$A_{s,min} = 0.0018bh = 0.0018 \times 1000 \times 200 = 360\ mm^2$

$A_s = 626.4\ mm^2 > A_{s,min} = 362\ mm^2\ , use\ \emptyset 12$

$Use\ 6\emptyset 12@20\ cm\ with\ A_{s,prov} = 678\ mm^2 > A_s = 626.4\ mm^2 for\ (1m)\ strip$

Check maximum step for main reinforcement (the smallest of):

1. $3h = 3 \times 200 = 600\ mm$
2. $450mm.$
3. $S = 380\left(\frac{280}{f_s}\right) - 2.5C_c = 380\left(\frac{280}{\frac{2}{3} \times 420}\right) - 2.5 \times 20 = 330mm$

$$S_{max} = 300\left(\frac{280}{f_s}\right) = 300\left(\frac{280}{\frac{2}{3}\times 420}\right) = 300mm \; - controled$$

$$S = 20\ cm \; < \; S_{max} = 30\ cm - OK$$

- **Temperature and shrinkage reinforcement:**

$$A_s(temperature\ and\ shrinkagr) = 0.0018bh = 0.0018(1000)(200) = 360\ mm^2$$

$$Use\ 6\emptyset 10@20\ cm\ with\ A_{s,prov} = 474\ mm^2 > A_s = 360\ mm^2 for\ (1m)\ strip$$

Check maximum step for temperature and shrinkage (the smallest of):

1. $5h = 5 \times 200 = 1000\ mm$
2. $450mm. \; - controled$

$$S = 20\ cm \; < \; S_{max} = 30\ cm - OK$$

4-8-5 Design of Landing:

Considering a 1-m length of the landing, the load on the landing is shown in figure (4-32). The middle will carry a full load, whereas the two 1.3-m lengths on each side will carry half the ultimate load.

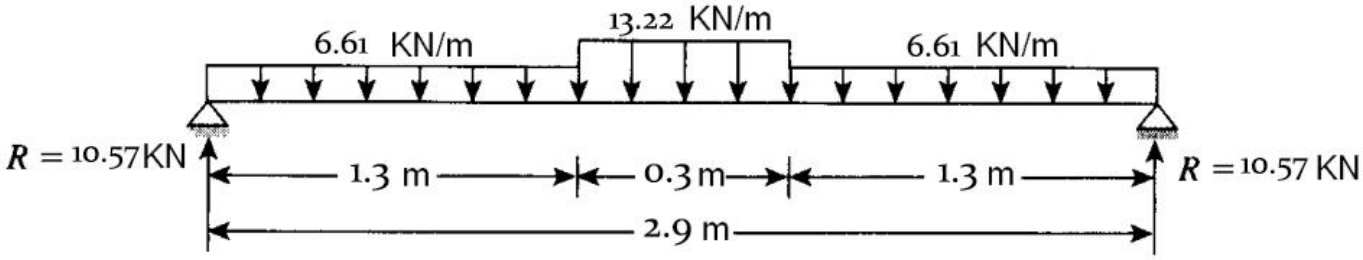

Figure (4-32): Loads and reactions on statically system of Landing.

- **Calculation of maximum moment and steel reinforcement:**

$$M_{u,max} = 10.57 \times \left(\frac{2.9}{2}\right) - 6.61 \cdot (1.3) \cdot \left(1.3 + \frac{0.3}{2}\right) - 13.22 \left(\frac{0.3}{2}\right)\left(\frac{0.3}{4}\right)$$

$$= 2.722\ kN.m\ /\ \text{m}$$

$$assume\ bar\ diameter\ \emptyset 12\ for\ main\ rinforcemnt\ for\ landing$$

$$d = 200 - 20 - 12 - \frac{12}{2} = 162mm$$

$$R_n = \frac{M_u}{\emptyset bd} = \frac{2.722 \times 10^6}{0.9 \times 1000 \times 162^2} = 0.115\ Mpa\ , m = \frac{f_y}{0.85\ f_c'} = \frac{420}{0.85 \times (24)} = 20.58$$

$$\rho = \frac{1}{m}\left(1 - \sqrt{1 - \frac{2R_n m}{f_y}}\right) = \frac{1}{20.58}\left(1 - \sqrt{1 - \frac{2 \cdot 0.115 \cdot 20.58}{420}}\right) = 0.000275$$

$$A_s = \rho bd = 0.000275 \times 1000 \times 162 = 44.55\ mm^2$$

$$A_{s,min} = 0.0018bh = 0.0018 \times 1000 \times 200 = 360\ mm^2$$

$$A_s = 44.55\ mm^2 < A_{s,min} = 362\ mm^2 \quad [select\ A_s = A_{s,min}] \quad , use\ \emptyset 12$$

$$Use\ 4\emptyset 12@30\ cm\ with\ A_{s,prov} = 452\ mm^2 > A_{s,min} = 362\ mm^2\ for\ (1m)\ strip$$

Check maximum step for main reinforcement (the smallest of):

1. $3h = 3 \times 200 = 600\ mm$
2. $450mm.$
3. $S = 380\left(\frac{280}{f_s}\right) - 2.5C_c = 380\left(\frac{280}{\frac{2}{3} \times 420}\right) - 2.5 \times 20 = 330mm$

$$S_{max} = 300\left(\frac{280}{f_s}\right) = 300\left(\frac{280}{\frac{2}{3} \times 420}\right) = 300mm\ - controled$$

$$S = 30\ cm \leq S_{max} = 30\ cm - OK$$

Figure (4-33) shows the structural detailing of stair:

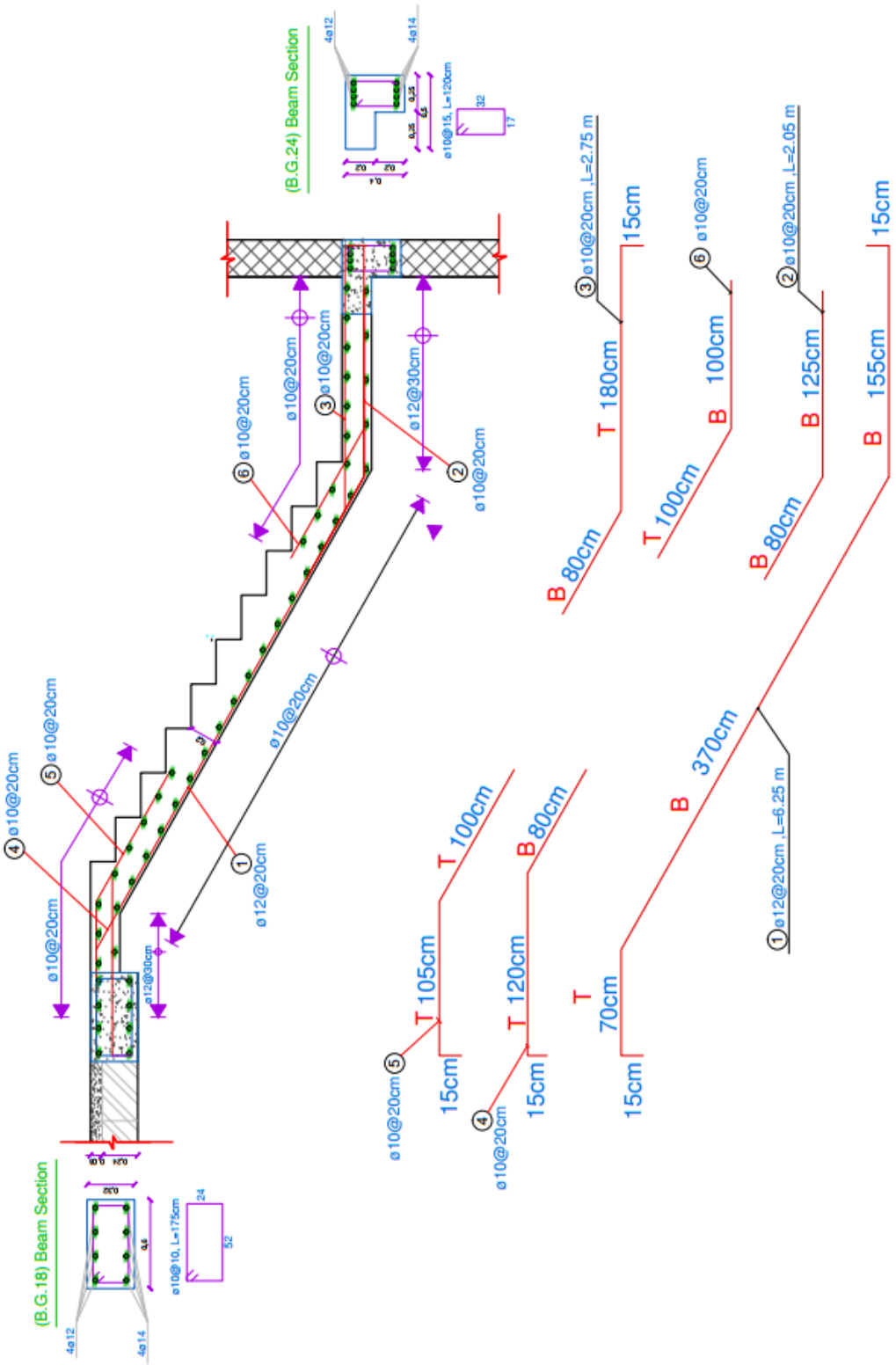

Figure (4-33): structural detailing of stair.

4-9 | Design of Shear Wall case.:

4-9-1 plan and materials of Shear wall:

The following figure demonstrate the location of shear wall that we consider to design it on key plan figure (4-34) , with materials of $f_{c'} = 24\ Mpa$, $f_y = 420\ Mpa$. and height of $h_w = 22.25\ m$ and thickness $b = 250\ mm$ with width $L_w = 3\ m$ and ratio of displacement over height $\frac{\Delta h}{h_w} = 0.0071$, vertical load $N_u or\ p_u = 1003.2\ kN$

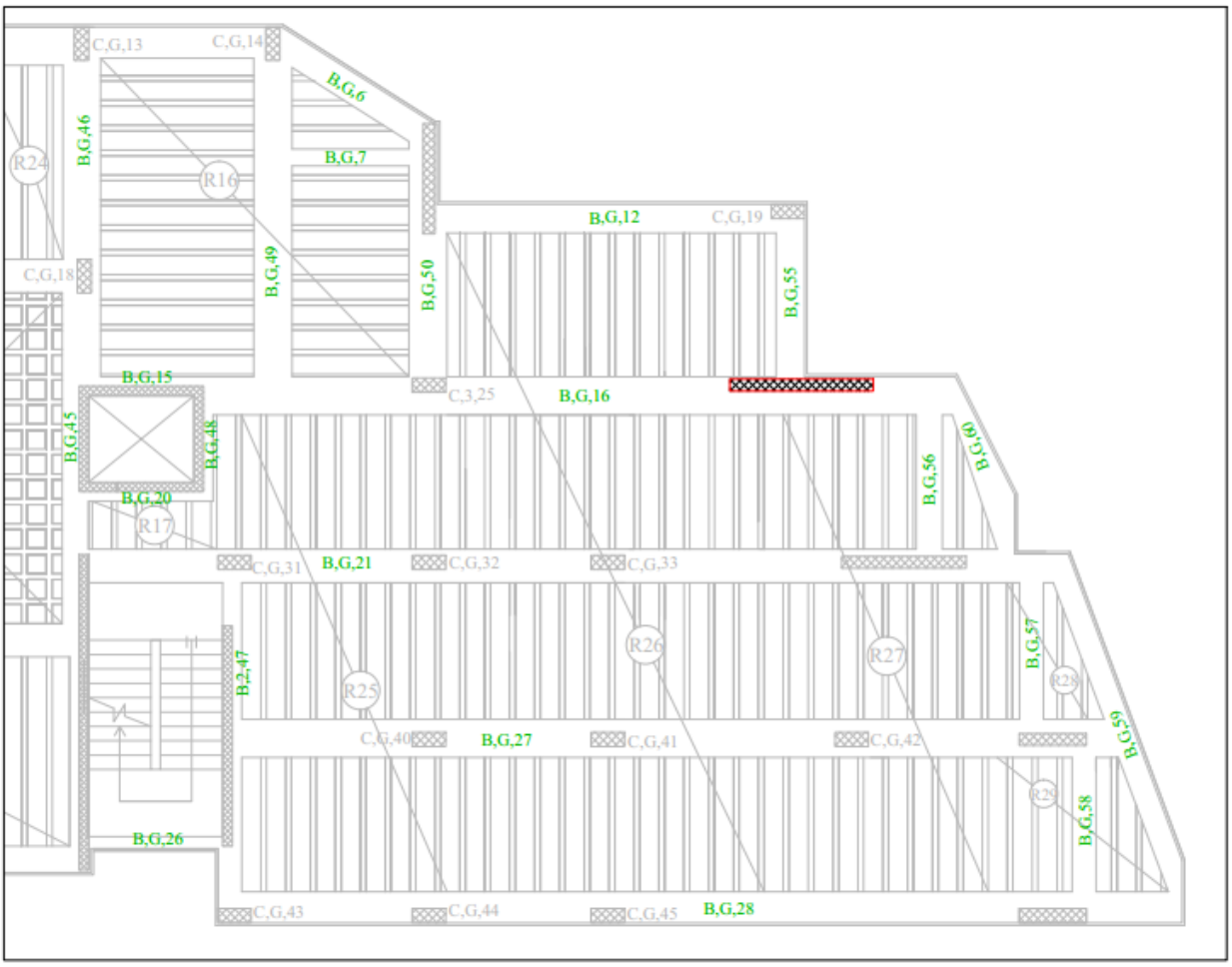

Figure (4-34): location of shear wall on key plan.

4-9-2 Elevation and internal Forces:

The following figure demonstrate the elevation and internal forces shear force of shear wall that we consider to design figure (4-35):

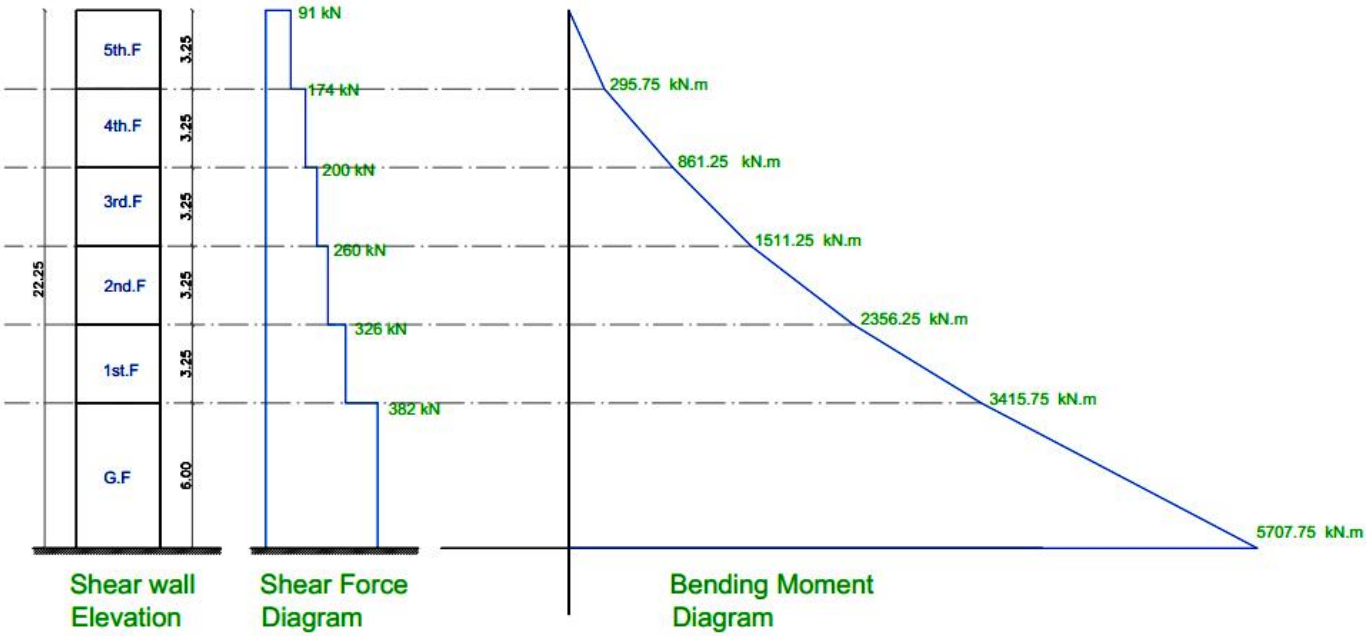

Figure (4-35): Elevation and internal forces of shear wall.

4-9-3 Design:

- **Moment M_u at critical section, (z_c) is the smallest of:**

$$z_c = \frac{L_w}{2} = \frac{3}{2} = 1.5\ m \quad - Controlled$$

$$z_c = \frac{h_w}{2} = \frac{22.25}{2} = 11.125\ m$$

$M_u = 5134.75\ kN$ **at critical section** z_c

Design as a rectangular section with $L_w = 300\ cm$, $b = 25cm$.

- **Calculation of effective depth (d) , the smallest of :**

$$d = 0.8 \times L_w = 0.8 \times 3000 = 2400\ mm - cnotrolled$$

$$d = 0.8 \times h_w = 0.8 \times 22250 = 17800\ mm$$

- **Design of shear force (Horizontal reinforcement A_{vh}) :**

$$max\ V_u = 382\ kN$$

Shear strength of concrete V_C is the smallest of :

1. $V_c = \frac{1}{6}\sqrt{f_c'}\ h\ d = \frac{1}{6}\sqrt{24} * 250 * 2400 * 10^{-3} = 489.9\ kN$

2. $V_c = 0.25\sqrt{f_c'}bd + \frac{N_u d}{4l_w}$

$$= 0.25\sqrt{24} \times 250 \times 2400 + \frac{1003.2\times10^3\times2400}{4\times3000} = 935.48\ kN$$

3. $V_c = \left[0.5\sqrt{f_c} + \frac{l_w\left(\sqrt{f_c'}+2\frac{N_u}{l_w\ h}\right)}{\frac{M_{u1}}{V_u}-\frac{l_w}{2}}\right]\frac{b\ d}{10}$

$$V_c = \left[0.5\sqrt{24} + \frac{3000\left(\sqrt{24}+2.67\right)}{\frac{5134.75\ x\ 10^6}{382\ x\ 10^3}-\frac{3000}{2}}\right]\frac{250\ x\ 2400}{10} = 261.08\ kN - Controlled$$

$$V_c = 261.08\ kN$$

$$\emptyset V_c + \emptyset V_s = V_u$$

$$\emptyset V_s = V_u - \emptyset V_c$$

$$V_s = \frac{V_u}{\emptyset} - V_c = \frac{382}{0.75} - 261.08 = 248.25\ kN$$

$$\frac{Av_h}{s_h} = \frac{Vs}{f_y\ d} = \frac{248.25 \times 10^3}{420 \times 2400} = 0.24$$

$$min\left(\frac{Av_h}{s_h}\right) = 0.0025 \times b = 0.0025 \times 250 = 0.625 > 0.25\ - OK$$

Select $\emptyset 10$, *Two layers*

- **Max steps (s_{max}) in (Horizontal reinforcement A_{vh}) is the smallest of :**

$$\frac{L_w}{5} = \frac{3000}{5} = 600\ mm$$

$$3(h\ or\ b) = 3 \times 250 = 750\ mm$$

$$450\ mm\ - controlled$$

$$Av_h = 2 \times 79 = 158\ mm^2\ , \frac{158}{s_h} = 0.625\ \ , s_h = \frac{158}{0.625} = 252.8\ mm$$

Select $s_h = 250\ mm\ \leq\ s_{max} = 450\ mm$

- **Design of uniform vertical reinforcement A_{mv} :**

$$A_{vv} = \left[0.0025 + 0.5\left(2.5 - \frac{hw}{lw}\right)x\left(\frac{Avh}{sh\ x\ b} - 0.0025\right)\right] \times\ h \times S_v$$

$$\frac{A_{vv}}{S_v} = \left[0.0025 + 0.5\left(2.5 - \frac{22.25}{3}\right) \times \left(\frac{158}{250 \times 250} - 0.0025\right)\right] \times 250 = 0.68$$

Select $\emptyset 10\ , Two\ layers$

- **Max steps (s_{max}) in (vertical reinforcement A_{vv}) is the smallest of :**

$$\frac{L_w}{5} = \frac{3000}{3} = 1000\ mm$$

$$3(h\ or\ b) = 3 \times 250 = 750\ mm$$

$$450\ mm\ - controlled$$

$$A_{vv} = 2 \times 79 = 158\ mm^2\ , \frac{158}{s_v} = 0.68\ \ , s_h = \frac{158}{0.68} = 232.35\ mm$$

Select $s_h = 250\ mm\ \leq\ s_{max} = 450\ mm$

- **Design of vertical steel in boundary A_{vB} :**

In this part of design part of moment will be resisted from uniform distributed vertical steel and the other part of moment will be resisted from vertical steel of boundary.

$$M_u = M_{uv} + M_{uB}$$

Part of M_{uv} :

$$A_{sv} = 158 \times \frac{300}{25} = 1896\ mm^2\ (value\ of\ A_{sv}\ in\ all\ section)$$

$$\frac{z}{L_w} = \frac{1}{(2 + \frac{0.85 \times \beta_1 \times fc' \times lw \times h}{Asv \times fy})}$$

$$= \frac{1}{(2 + \frac{0.85 \times 0.85 \times 24 \times 3000 \times 250}{1896 \times 420})} = 0.0545$$

$$M_{uv} = 0.9 \times [0.5 \cdot A_{sv} \cdot fy \cdot lw \left(1 - \frac{z}{2 \times L_w}\right)]$$

$$= 0.9 \times \left[0.5 \times 1896 \times 420 \times 3000 \left(1 - \frac{0.0545}{2}\right)\right] = 1045\ kN$$

$M_{uB} = M_{u,max} - M_{uv} = 5707.75 - 1045 = 4662.75\ kN$ must be resisted from vertical steel in boundary.

- **Length of compression zone (x) location of neutral axis:**

$$X \geq \frac{L_w}{600 \times \frac{\Delta h}{h_w}} = \frac{3000}{600 \times 0.0071} = 704.22\ mm$$

- **Length of boundary element (L_B) :**

$$L_B \geq \frac{X}{2} = \frac{704.22}{2} = 352.11\ mm$$

$$\geq X - 0.1 \times L_w = 704.22 - 0.1 \times 3000 = 404.22\ mm$$

Select $L_B = 700\ mm$

$$As'_B = \frac{(\frac{M_{uB}}{0.9}) \times 10^6}{fy \times (L_w - L_B)} = \frac{(\frac{4662.75}{0.9}) \times 10^6}{420 \times (3000 - 700)} = 5362.18\ mm^2$$

Select $28\emptyset16$ $with\ A_{s,prov} = 5628\ mm^2 > As'_B = 5362.18\ mm^2$

4-9-4 Details of shear wall:

Figure (4-36) shows the structural detailing of shear wall:

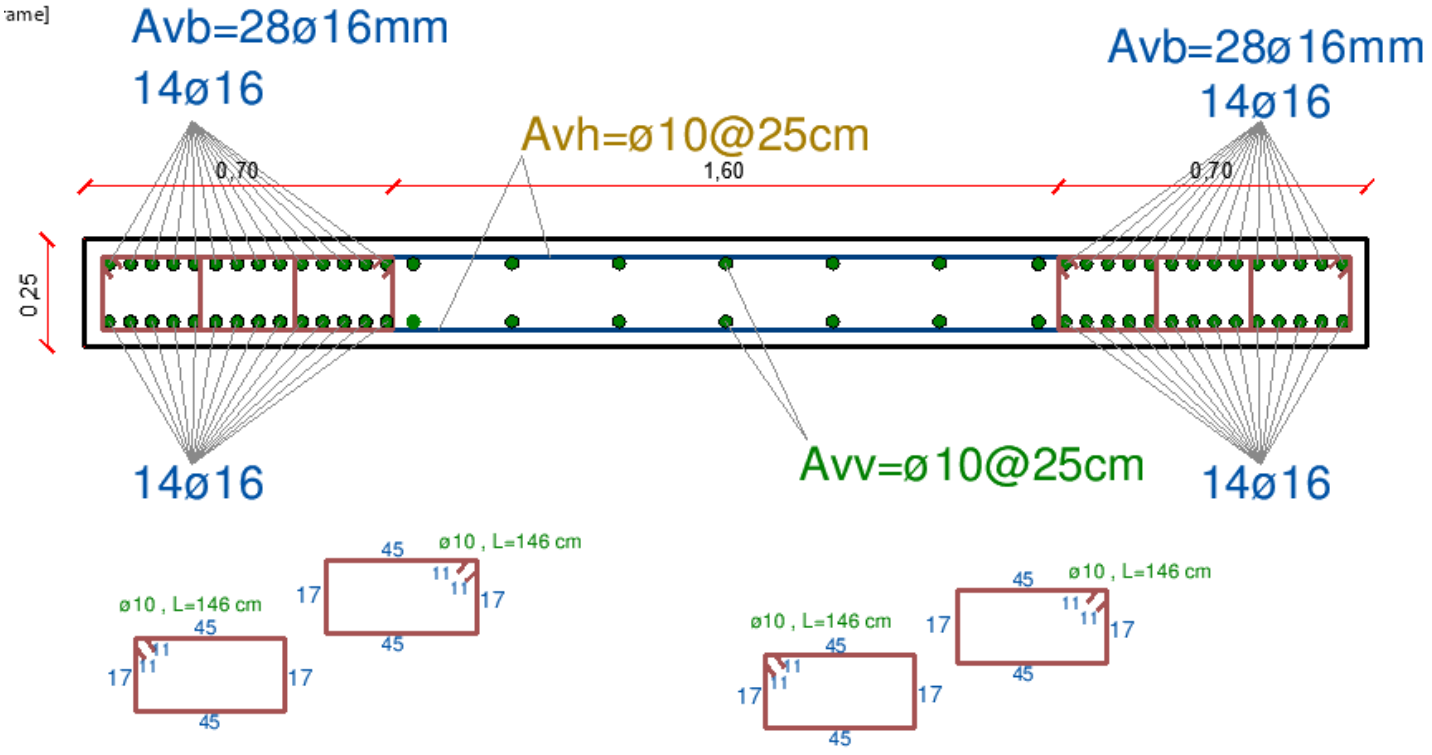

Figure (4-36): structural detailing of shear wall.

4-10 | Design isolated Footing:

4-10-1 Materials and Loads:

Isolated footing that we consider to design with materials of:

$f_{c'} = 24\ Mpa\ , f_y = 420\ Mpa$.

Dead Load (service) $= 1533\ kN.$
Live Load (service) $= 323.5\ kN.$
Total services load $= 1533 + 323.5 = 1856.5\ kN.$
Total Factored load $= 1.2(1533) + 1.6(323.5) = 2357.2\ kN.$
Column dimension$(a \times b) = 35\ cm \times 60\ cm.$
Soil density $= 18\ (\frac{kg}{cm^2})$.
Allowable bearing capacity $q_{all} = 300\ (\frac{kN}{m^2})$

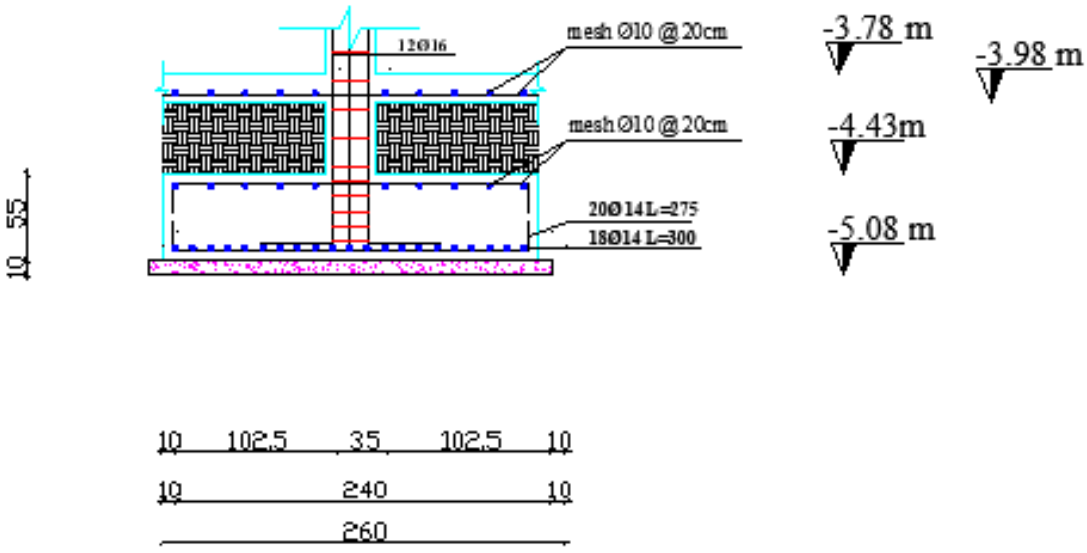

Figure (4-37): Footing Section.

Assume $h = 60\ cm.$

$q_{all-net} = 300 - (25 \times 0.6) - (18 \times 0.6) - 2.5 = 284\ (\frac{kN}{m^2})$

- **Area of footing:**

$$A = \frac{p_t}{q_{all-net}} = \frac{1856.5}{284} = 6.53\ m^2$$

Assume Square Footing

B required = 2.62m, Select $B = 2.7\ m$

- **Bearing pressure:**

$$q_u = \frac{2357.2}{2.7 \times 2.7} = 323.40\ \ (\frac{kN}{m^2})$$

4-10-2 Design:

- **Design of one-way shear strength:**

Critical Section at Distance d **From The Face of Column Assume** $h = 60\ cm$ **.**
Bar diameter $\emptyset 14$ **for main reinforcement and 7.5 cm Cover.**

$$d = 600 - 75 - 14 = 511\ mm$$

$$V_u = q_u \times \left(\frac{B-a}{2} - d\right) \times L = 323.4 \times \left(\frac{2.7 - 0.35}{2} - 0.511\right) \times 2.7 = 601.62\ kN$$

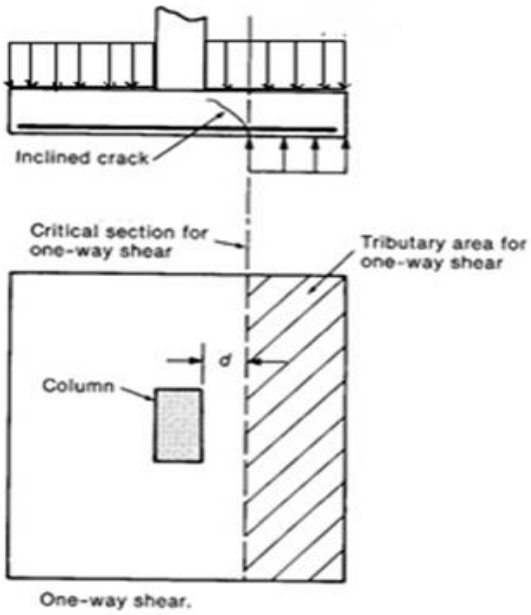

Figure (4-38): one-way shear calculation.

$$\emptyset V_C = \emptyset \times \frac{1}{6} \times \sqrt{f_{c'}} \times b \times d = 0.75 \times \frac{1}{6} \times \sqrt{24} \times 2700 \times 511 = 844.89\ kN$$

$$\emptyset V_C = 844.89\ kN > V_u = 601.62\ kN\ - Safe$$

- **Design of Tow-way shear strength:**

  $V_u = p_u - FR_b$

  $FR_b = q_u \times area\ of\ critical\ section$

  $V_u = 2357.2 - 323.4 \times [(0.6 + 0.511) \times (0.35 + 0.511)] = 2065.8\ kN$

  The punching shear strength is the smallest value of the following equations:

  1. $\emptyset V_C = \emptyset \times \frac{1}{6}\left(1 + \frac{2}{\beta_c}\right) \times \sqrt{f_{c'}} \times b_\circ \times d$
  2. $\emptyset V_C = \emptyset \times \frac{1}{12}\left(\frac{\alpha_s}{\frac{b_\circ}{d}} + 2\right) \times \sqrt{f_{c'}} \times b_\circ \times d$
  3. $\emptyset V_C = \emptyset \times \frac{1}{3} \times \sqrt{f_{c'}} \times b_\circ \times d$

Where:

$$\beta_c = \frac{column\ Length\ (a)}{column\ width\ (b)} = \frac{60}{35} = 1.71$$

$b_\circ = Perimeter\ of\ critical\ section\ taken\ at\ (d/2)\ from\ the\ loaded\ area.$

$= 2 \times (51.1 + 60) + 2 \times (51.1 + 35) = 384.4\ cm$

$\alpha_s = 40\ for\ interior\ coulmn$

Substituting values in equations:

$$\emptyset V_C = 0.75 \times \frac{1}{6}\left(1 + \frac{2}{1.71}\right) \times \sqrt{24} \times 3844 \times 511 = 2405.7\ kN$$

$$\emptyset V_C = 0.75 \times \frac{1}{12}\left(\frac{40}{\frac{3844}{511}} + 2\right) \times \sqrt{24} \times 3844 \times 511 = 4400.93\ kN$$

$$\emptyset V_C = 0.75 \times \frac{1}{3} \times \sqrt{24} \times 3844 \times 511 = 2405.7\ kN$$

$$\emptyset V_C = 2405.7\ kN > V_u = 2065.8\ kN$$

- **Design Bending moment:**

Critical Section at the Face of Column

$$FR = q_u \times \left(\frac{B-a}{2} - d\right) \times L = 323.4 \times \left(\frac{2.7-0.35}{2}\right) \times 2.7 = 1047.8\ kN$$

$$M_u = 323.4 \times \frac{3.88}{2} = 627.4\ kN.m$$

$$R_n = \frac{M_u}{\emptyset b d^2} = \frac{627.4 \times 10^6}{0.9 \times 2700 \times 511^2} = 0.98\ MPa$$

$$m = \frac{420}{0.85 \times 24} = 20.58$$

$$\rho = \frac{1}{m}\left(1 - \sqrt{1 - \frac{2.m.R_n}{420}}\right) = \frac{1}{20.58}\left(1 - \sqrt{1 - \frac{2 \times 20.58 \times 0.98}{420}}\right) = 0.00239$$

$$A_{S,req} = \rho \times b \times d = 0.00239 \times 2700 \times 511 = 3297.5\ mm^2$$

$$A_{Smin} = 0.0018 \times 2700 \times 600 = 2916\ mm^2$$

$$A_{S,req} = 3297.5\ mm^2 > A_{Smin} = 2916\ mm^2 - OK$$

Check maximum step (S) is the smallest of:

1. $3h = 3 \times 600 = 1800\ mm$
2. $450\ mm$.
3. $S = 380\left(\frac{280}{f_s}\right) - 2.5C_c = 380\left(\frac{280}{\frac{2}{3}\times 420}\right) - 2.5 \times 75 = 19.25\ mm\ - controled$

$$Use\ 22\emptyset 14\ with\ A_{s,prov} = 3388\ mm^2 > A_{S,req} = 3297.5\ mm^2$$

Check for strain:

$$a = \frac{A_{s.f_y}}{0.85b\,f'_c} = \frac{3385 \times 420}{0.85 \times 2700 \times 24} = 24.2\ mm$$

$$c = \frac{a}{\mathcal{B}_1} = \frac{24.2}{0.85} = 28.47\ mm$$

$$\varepsilon_s = 0.003\left(\frac{d-c}{c}\right) = 0.003\left(\frac{511-28.47}{28.47}\right) = 0.0508 > 0.005 \ \ldots\ldots 0k$$

4-10-3 Details of Footing:

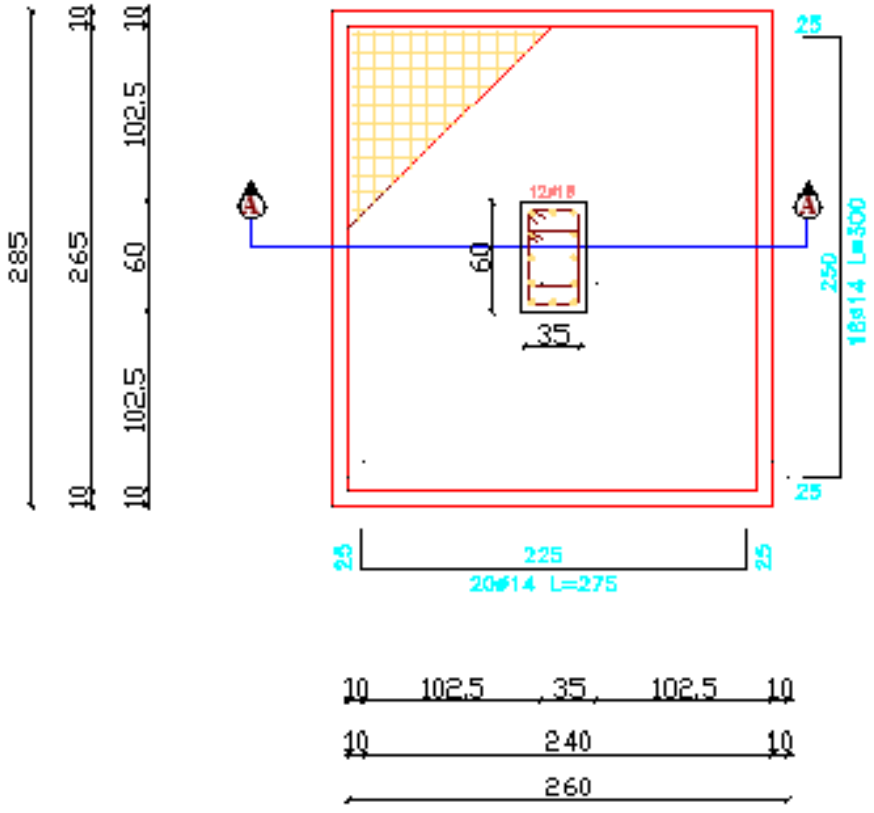

Figure (4-39): Detailing of footing.